产品索引
INDEX

3 气缸 Air Cylinders

微型 Miniature

系列 Series	缸径 Bore Size (mm)	标准行程 Standard Stroke (mm)	页码 Page No.
GSP	4, 6	5, 10, 15	3.001
KCJP	4, 6, 10, 15	5, 10, 15	3.002
KCJP2	4, 6, 10, 16	5~40	3.004

标准型 Standard

系列 Series	缸径 Bore Size (mm)	标准行程 Standard Stroke (mm)	页码 Page No.
KCJ2	10, 16	15~200	3.007
KCM2	20, 25, 32, 40	25~300	3.011
KCM2R	20, 25, 32, 40	25~300	3.017
MA	16, 20, 25, 32, 40, 50, 63	25~500	3.023
MAL	20, 25, 32, 40	25~500	3.029

导杆型 Guide

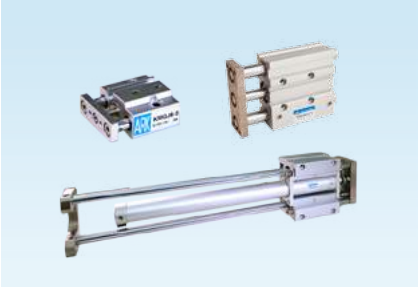

系列 Series	缸径 Bore Size (mm)	标准行程 Standard Stroke (mm)	页码 Page No.
KMGJ	6, 10	5~20	3.096
KMGPM/L	12, 16, 20, 25, 32, 40, 50, 63	10~200	3.098
KMGGM/L	20, 25, 32, 40, 50, 63, 80, 100	75~1300	3.100

轻巧型 Light

系列 Series	缸径 Bore Size (mm)	标准行程 Standard Stroke (mm)	页码 Page No.
KCG1	20, 25, 32, 40, 50, 63	25~300	3.032

标准型 Standard

系列 Series	缸径 Bore Size (mm)	标准行程 Standard Stroke (mm)	页码 Page No.
KMB	40, 50, 63, 80, 100	25~800	3.037
KCA1	40, 50, 63, 80, 100	25~800	3.041
KCS1	125, 140, 160, 180, 200, 250, 300, 350, 400	25~1200	3.045
SC	32, 40, 50, 63, 80, 100	25~1000	3.051
SC	125, 160, 200, 250	25~1000	3.053
SU	32, 40, 50, 63, 80, 100	25~1000	3.058

双缸型 Dual-Rod

系列 Series	缸径 Bore Size (mm)	标准行程 Standard Stroke (mm)	页码 Page No.
KCXSJM/L	6, 10, 15, 20, 25, 32	10~100	3.105
KCXSM/L	10, 15, 20, 25, 32	10~100	3.109
KCXSW	10, 15, 20, 25	10~150	3.111
TN	10, 16, 20, 25, 32	10~200	3.114

薄型 Compact

系列 Series	缸径 Bore Size (mm)	标准行程 Standard Stroke (mm)	页码 Page No.
KCQ2	12, 16, 20, 25, 32, 40, 50, 63, 80, 100	5~100	3.074
KCQ2	32, 40, 50, 63, 80, 100	125~300	3.082
KCQ2	125, 140, 160, 200	10~300	3.084
SDA	12, 16, 20, 25, 32, 40, 50, 63, 80, 100	5~130	3.086
ADN/AEN	12, 16, 20, 25, 32, 40, 50, 63, 80, 100, 125	5~300	3.090
KCQM	12, 16, 20, 25, 32, 40, 50, 63, 80, 100	5~100	3.094

ISO标准型 ISO Standard

系列 Series	缸径 Bore Size (mm)	标准行程 Standard Stroke (mm)	页码 Page No.
KC85 (ISO6432)	8, 10, 12, 16, 20, 25	10~500	3.019
KCP95 (ISO15552)	32, 40, 50, 63, 80, 100, 125	25~800	3.061
KC95 (ISO15552)	160, 200, 250, 320	25~1500	3.065
SI (ISO15552)	32, 40, 50, 63, 80, 100, 125, 160, 200	25~1000	3.068
SIL (ISO15552)	40, 50, 63, 80, 100, 125, 160, 200	25~1000	3.072

附件 Accessories

系列 Series	附件 Component	页码 Page No.
PHS/ KJAT/KJAF	鱼眼接头/浮动接头 Female rod ends joint/ Floating joint	3.192, 3.193
D-K, KT	磁性开关 Auto switch	3.195~3.200

自由安装型 Free Mount

系列 Series	缸径 Bore Size (mm)	标准行程 Standard Stroke (mm)	页码 Page No.
KCUJ	6, 8, 10, 12, 16, 20	4~50	3.116
KCU	6, 10, 16, 20, 25, 32	5~100	3.119

滑台气缸 Slide Table

系列 Series	缸径 Bore Size (mm)	标准行程 Standard Stroke (mm)	页码 Page No.
KMXS	6, 8, 12, 16, 20, 25	10~150	3.133
KMXQ	6, 8, 12, 16, 20, 25	10~150	3.142
KMXH	6, 10, 16, 20	5~60	3.149

旋转夹紧气缸 Rotary Clamp

系列 Series	缸径 Bore Size (mm)	标准行程 Standard Stroke (mm)	页码 Page No.
KMK	12, 16, 20, 25, 32, 40, 50, 63	-	3.160
ACK	25, 32, 40, 50, 63	-	3.163

平板型 Plate Style

系列 Series	缸径 Bore Size (mm)	标准行程 Standard Stroke (mm)	页码 Page No.
KMUB	25, 32, 40, 50, 63	5~300	3.124

旋转气缸 Rotary Table

系列 Series	尺寸 Size (mm)	旋转角度 Rotary Angle	页码 Page No.
KMSQB	10, 20, 30, 50, 70, 100, 200	0~190°	3.152

二爪气爪 2-Finger Air Gripper

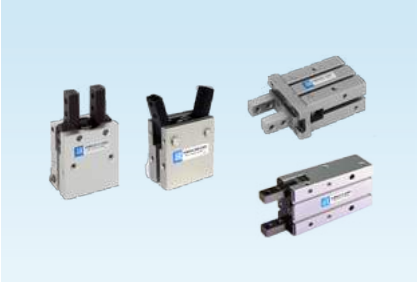

系列 Series	缸径 Bore Size (mm)	标准行程 Standard Stroke (mm)	页码 Page No.
KMHC2	10, 16, 20, 25	-10°~30°	3.165
KMHC2M	12, 16, 20, 25, 32	-10°~30°	3.167
KMHY2	10, 16, 20, 25	-3°~180°	3.169
KMHZ2	6, 10, 16, 20, 25, 32, 40	-	3.171

磁耦式无杆气缸 Magnetically Coupled Rodless

系列 Series	缸径 Bore Size (mm)	标准行程 Standard Stroke (mm)	页码 Page No.
KCY3B	15, 20, 25, 32, 40	50~1000	3.126
KCY3R	6, 10, 15, 20, 25, 32, 40, 50, 63	50~1000	3.127
KCY1S	6, 10, 15, 20, 25, 32, 40	50~1000	3.130

叶片式摆动气缸 Vane Type Rotary Actuator

系列 Series	尺寸 Size (mm)	摆动角度 Rotary Angle	页码 Page No.
KCRB2	10, 15, 20, 30, 40	90°, 100°, 180°, 270°	3.154

其他气爪 Other Air Grippers

系列 Series	缸径 Bore Size (mm)	页码 Page No.
KMHS3	16, 20, 25, 32, 40, 50, 63, 80, 100, 125	3.173
KMHL2	10, 16, 20, 25, 32, 40	3.177
KMHF2	8, 12, 16, 20	3.179

ARK 气缸
Air Cylinder

系 列 Series	类型 Style	缸 径/尺寸 Bore size / Size (mm)	标准行程 Standard Stroke (mm)	页 码 Page No.
GSP	微型（单动）Mini cylinder (Single acting)	4, 6	5, 10, 15	3.001
KCJP	微型（单动）Miniature cylinder (Single acting)	4, 6, 10, 15	5, 10, 15	3.002
KCJP2	微型 Miniature cylinder	4, 6, 10, 16	5~40	3.004
KCJ2	标准型 Standard	10, 16	15~200	3.007
KCM2	标准型 Standard	20~40	25~300	3.011
KCM2R	标准型/直接安装 Standard/ Direct mount	20~40	25~300	3.017
KC85	ISO6432标准 ISO6432 Standard	8~25	10~500	3.019
MA	不锈钢 Stainless steel	16~63	25~500	3.023
MAL	铝合金 Aluminium	20~40	25~500	3.029
KCG1	轻巧型 Light	20~63	25~300	3.032
KMB	标准中型 Standard/ Medium bore size	40~100	25~800	3.037
KCA1	标准中型 Standard/ Medium bore size	40~100	25~800	3.041
KCS1	标准大缸径 Standard/ Large bore size	125~400	25~1200	3.045
SC	标准中型 Standard/ Medium bore size	32~100	25~1000	3.051
SC	标准大缸径 Standard/ Large bore size	125~250	25~1000	3.053
SU	标准中型 Standard/ Medium bore size	32~100	25~1000	3.058
KCP95	ISO15552标准 ISO15552 Standard	32~125	25~800	3.061
KC95	ISO15552标准 ISO15552 Standard	160~320	25~1500	3.065
SI	ISO15552标准 ISO15552 Standard	32~200	25~1000	3.068
SIL	ISO15552标准带锁 ISO15552 Standard Lock	40~200	25~1000	3.072
KCQ2	薄型 Compact	12~100	5~100	3.074
KCQ2	长行程薄型 Compact/ Long stroke	32~100	125~300	3.082
KCQ2	大缸径薄型 Compact/ Large bore size	125~200	10~300	3.084
SDA	薄型 Compact	12~100	5~130	3.086
ADN/AEN	ISO21287标准薄型 ISO21287 Standard Compact	12~125	5~300	3.090
KCQM	导杆型薄型 Guide compact	12~100	5~100	3.094
KMGJ	微型导杆型 Miniature Guide	6, 10	5~20	3.096
KMGPM/L	导杆型 Guide	12~63	10~200	3.098
KMGGM/L	导杆型 Guide	20~100	75~1300	3.100
KCXSJM/L	薄型/双缸型 Compact/ Dual rod	6~32	10~100	3.105
KCXSM/L	双缸型 Dual rod	10~32	10~100	3.109
KCXSW	双出杆双缸型 Dual rod/ Double rod	10~25	10~150	3.111
TN	双缸型 Dual rod	10~32	10~200	3.114

ARK 气缸
Air Cylinder

系 列 Series	类型 Style	缸 径/尺寸 Bore/ Size (mm)	标准行程 Standard Stroke (mm)	页 码 Page No.
KCUJ	小型自由安装型 Miniature free mount	6~20	4~50	3.116
KCU	自由安装型 Free mount	6~32	5~100	3.119
KMUB	平板型 Plate style	25~63	5~300	3.124
KCY3B	磁耦式无杆型 Magnetically coupled rodless	15~40	50~1000	3.126
KCY3R	磁耦式无杆型(直接安装) Magnetically coupled rodless (Direct mounting)	6~63	50~1000	3.127
KCY1S	磁耦式无杆型 (滑动轴承) Magnetically coupled rodless (Slide bearing)	6~40	50~1000	3.130
KMXS	滑台（交叉滚柱导轨） Slide table (Cross roller guide)	6~25	10~150	3.133
KMXQ	滑台（循环直线导轨） Slide table (Recirculating linear guide)	6~25	10~150	3.142
KMXH	滑台（小型）Slide table (Compact)	6~20	5~60	3.149
KMSQB	旋转型 Rotary table	10~200	0~190°	3.152
KCRB2	叶片式摆动气缸 Vane type rotary actuator	10~40	90°, 100°, 180°, 270°	3.154
KMK	旋转夹紧 Rotary clamp	12~63		3.160
ACK	转角气缸 Rotary clamp	25~63		3.163
KMHC2	角度开闭气爪 Angular open-close air gripper	10~25	-10°~30°	3.165
KMHC2M	角度开闭气爪 Angular open-close air gripper	12~32	-10°~30°	3.167
KMHY2	180°角度开闭气爪 180°Angular open-close air gripper	10~25	-3°~180°	3.169
KMHZ2	平行开闭气爪 Parallel open-close air gripper	6~40		3.171
KMHS3	三爪平行开闭气爪 3-Finger parallel open-close air gripper	16~125		3.173
KMHL2	宽型气爪 Wide opening air gripper	10~40		3.177
KMHF2	薄型气爪 Low profile air gripper	8~20		3.179
PHS	鱼眼接头 Female rod ends joint			3.192
KJAT/KJAF	浮动接头 Floating joint			3.193
D-A73K	磁性开关 Auto switch			3.195
D-Z80VK	磁性开关 Auto switch			3.196
KT-11	磁性开关 Auto switch			3.197
KT-39	磁性开关 Auto switch			3.198
D-M9BK	磁性开关 Auto switch			3.199
共通规格的订制规格 Made to Order Common Specifications				3.201

3

ARK 气缸理论出力表
Theoretical Force Table of Air Cylinder

双动气缸 Double Acting Cylinder

单位 Unit: N

缸径 Bore size (mm)	活塞杆直径 Rod size (mm)	动作方向 Operating direction	活塞面积 Piston area (mm^2)	使用压力 Operating pressure (MPa)								
				0.2	0.3	0.4	0.5	0.6	0.7	0.8	0.9	1.0
6	3	伸出 OUT	28.3	5.7	8.5	11	14.1	17.0	19.8	-	-	-
		缩回 IN	21.2	4.2	6.4	8.5	10.6	12.7	14.8	-	-	-
10	4	伸出 OUT	78.5	15.7	23.6	31.4	39.3	47.1	55.0	-	-	-
		缩回 IN	66.0	13.2	19.8	26.4	33.0	39.6	46.2	-	-	-
16	5	伸出 OUT	201	40.2	60.3	80.4	100.5	120.6	140.7	-	-	-
		缩回 IN	181	36.3	54.4	72.6	90.7	108.9	127	-	-	-
20	8	伸出 OUT	314	62.8	94.2	125.7	157.1	188.5	220	251	283	314
		缩回 IN	264	52.8	79.2	106	132	158	185	211	238	264
25	10	伸出 OUT	491	98.2	147.3	196.3	245	294	344	393	442	491
		缩回 IN	412	82.4	124	165	206	247	288	330	371	412
32	12	伸出 OUT	707	141.4	212	283	353	424	495	565	636	707
		缩回 IN	594	118.8	178.1	238	297	356	416	475	534	594
40	14	伸出 OUT	1257	251	377	503	628	754	880	1010	1131	1257
		缩回 IN	1107	221	331	441	552	662	770	882	993	1103
50	20	伸出 OUT	1963	393	589	785	982	1178	1374	1571	1767	1963
		缩回 IN	1649	330	495	660	825	990	1155	1319	1484	1649
63	20	伸出 OUT	3120	623	935	1247	1559	1870	2180	2490	2810	3120
		缩回 IN	2800	561	841	1121	1402	1682	1962	2240	2520	2800
80	25	伸出 OUT	5030	1005	1508	2010	2510	3020	3520	4020	4520	5030
		缩回 IN	4540	907	1361	1814	2270	2720	3170	3630	4080	4540
100	30	伸出 OUT	7850	1571	2360	3140	3930	4710	5500	6280	7070	7850
		缩回 IN	7150	1429	2140	2860	3570	4290	5000	5720	6430	7150
125	36	伸出 OUT	12270	2450	3680	4910	6150	7360	8590	9820	11040	12270
		缩回 IN	11250	2250	3380	4500	5630	6750	7880	9000	10130	11250
140	36	伸出 OUT	15390	3080	4620	6160	7700	9240	10780	12320	13850	15390
		缩回 IN	14380	2880	4310	5750	7190	8630	10060	11500	12940	14380
160	40	伸出 OUT	20100	4020	6030	8040	10050	12060	14070	16080	18100	20110
		缩回 IN	18850	3770	5650	7540	9420	11310	13190	15080	16960	18850
180	45	伸出 OUT	25400	5090	7630	10180	12720	15270	17810	20360	22900	25450
		缩回 IN	23900	4770	7160	9540	11930	14310	16700	19090	21470	23860
200	50	伸出 OUT	31400	6280	9420	12570	15710	18850	21990	25130	28270	31420
		缩回 IN	29500	5890	8840	11780	14730	17670	20620	23560	26510	29450
250	60	伸出 OUT	49100	9820	14730	19630	24540	29450	34360	39270	44180	49090
		缩回 IN	46300	9250	13880	18500	23130	27760	32380	37010	41630	46260
300	70	伸出 OUT	70700	14140	21210	28270	35340	42410	49480	56550	63620	70690
		缩回 IN	66800	13370	20050	26730	33420	40400	46790	53470	60150	66840

单动气缸 Single Acting Cylinder

缸径 Bore size (mm)	活塞杆直径 Rod size (mm)	动作方向 Operating direction	活塞面积 Piston area (mm^2)	使用压力 Operating pressure (MPa)								
				0.2	0.3	0.4	0.5	0.6	0.7	0.8	0.9	1.0
2.5	1	伸出 OUT	4.9	-	0.3	0.8	1.3	1.74	2.23	-	-	-
		缩回 IN	-	0.6								
4	2	伸出 OUT	12.6	-	1.0	2.2	3.5	4.7	6.0	-	-	-
		缩回 IN	-	1.5								
6	3	伸出 OUT	28.2	2.0	4.0	7.0	10	13	16	-	-	-
		缩回 IN	-	1.5								
10	4	伸出 OUT	78.5	9	17	25	33	41	48	-	-	-
		缩回 IN	-	2.5								
16	5	伸出 OUT	201	5.7	45.8	65.9	86	106.1	126.2	-	-	-
		缩回 IN	-	7								
20	8	伸出 OUT	314	20	50	80	120	150	180	210	240	270
		缩回 IN	-	8								
25	10	伸出 OUT	490	50	100	150	200	250	300	340	390	440
		缩回 IN	-	14								
32	12	伸出 OUT	804	93	170	250	330	410	490	570	650	730
		缩回 IN	-	15								
40	14	伸出 OUT	1256	170	290	420	540	670	790	920	1040	1170
		缩回 IN	-	24								

ARK

微型气缸(单动)
Mini Air Cylinder (Single Acting)
Series GSP (Ø4~Ø6)

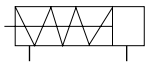

规格 Specifications

缸径 Bore size (mm)	4	6
接管口径 Port size Rc(PT)	适用气管 U0425 Fit tubing U0425	M5x0.8
使用流体 Fluid	过滤压缩空气 Filtered compressed air	
动作形式 Action	单动 (弹簧压回) Single acting (Spring return)	
保证耐压力 Proof pressure (MPa)	1.0	
使用压力范围 Operating pressure range (MPa)	0.3~0.7	
环境及流体温度 Ambient and fluid temperature	5~60℃	
缓冲 Cushion	无 None	
行程公差 Stroke tolerance (mm)	$^{+0.5}_{0}$	
* 润滑 Lubrication	不需要 Not required	

* 如需要润滑请使用透平 1 号油 ISOVG32。Please use Turbine oil 1st Grade ISOVG32 if necessary.

型号表示方法 How to Order

GSP **4** - **10** - **M**

缸径
Bore size

4	Ø4 mm
6	Ø6 mm

行程
Stroke

5	5 mm
10	10 mm
15	15 mm

杆端螺纹
Rod end thread

-	无螺纹 None
M	外螺纹 Male thread

外形尺寸图 Dimensions (mm)

GSP4

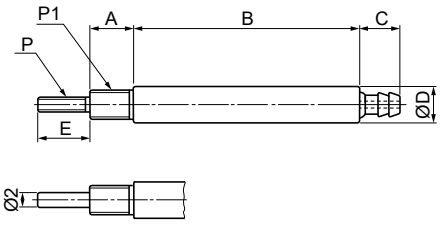

杆端无螺纹
Non-threaded rod end

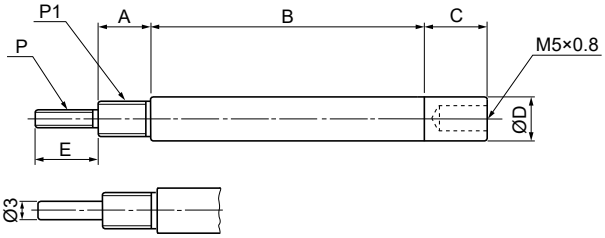

杆端无螺纹
Non-threaded rod end

型号 Model	A	B			C	D	E	P	P1
		ST=5	ST=10	ST=15					
GSP4	6	18.9	24.9	30.9	5.5	5	7	M2x0.4	M4x0.7
GSP6	8	20.5	26.5	31.5	8	8	16.5	M3x0.5	M6x1.0

ARK

微型气缸(单动)
Miniature Air Cylinder (Single Acting)
Series KCJP (Ø4~Ø15)

规格 Specifications

缸径 Bore size (mm)	4	6	10	15
接管口径 Port size Rc(PT)	M3x0.5	M5x0.8		
使用流体 Fluid	过滤压缩空气 Filtered compressed air			
动作形式 Action	单动 (弹簧压回) Single acting (spring return)			
保证耐压力 Proof pressure (MPa)	1.0			
使用压力范围 Operating pressure range (MPa)	0.3~0.7	0.2~0.7	0.15~0.7	
环境及流体温度 Ambient and fluid temperature	-5~60℃ (未冻结 No freezing)			
缓冲 Cushion	-			
行程公差 Stroke tolerance (mm)	$^{+1.0}_{0}$			
* 润滑 Lubrication	不需要 Not required			

* 如需要润滑请使用透平 1 号油 ISOVG32。Please use Turbine oil 1st Grade ISOVG32 if necessary.

型号表示方法 How to Order

KCJP [B] [6] - [10] [H4] - [B]

安装形式 Mounting

B	面板安装 Panel mounting
S	埋入 Embedded

缸径 Bore size

4	Ø4 mm
6	Ø6 mm
10	Ø10 mm
15	Ø15 mm

行程 Stroke

5	5 mm
10	10 mm
15	15 mm

软管接头 (仅 Ø6~Ø15 的面板安装型) Hose nipple (Ø6~Ø15 panel mounting type only)

-	无 None
H4	Ø4/ Ø2.5 管子用 For Ø4/ Ø2.5 tubing
H6	Ø6/ Ø4 管子用 For Ø6/ Ø4 tubing

杆端螺纹 Rod end thread

-	外螺纹 Male thread
B	无螺纹 None

3

外形尺寸图 Dimensions (mm)

埋入型的安装孔推荐尺寸
Recommended Mounting Hole Dimensions for Embedded Type

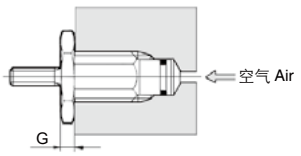

埋入状态 When embedded

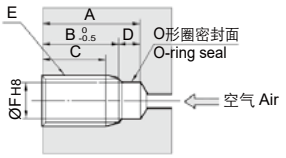

安装加工尺寸图
Machining dimensions for mounting

缸径 Bore size	A			B			C			D	E	F	G
	ST=5	ST=10	ST=15	ST=5	ST=10	ST=15	ST=5	ST=10	ST=15				
4	12	20	28	8.5	16.5	24.5	6	14	22	3.5	M8x1.0	6.5	3
6	16	23	30	12.5	19.5	26.5	10	17	24	3.5	M10x1.0	8.5	3
10	17	23.5	30.5	13.5	20	27	10.5	17	24	3.5	M15x1.5	12	4
15	19	25	31.5	14.5	20.5	27	11.5	17.5	24	4.5	M22x1.5	19	5

微型气缸(单动)
Mini Air Cylinder (Single Acting)
Series KCJP

外形尺寸图 Dimensions (mm)

KCJPB4

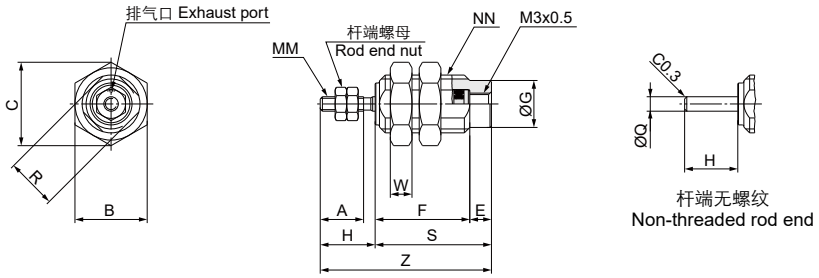

KCJPS4

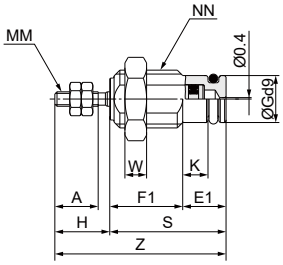

KCJPB (Ø6~Ø15)

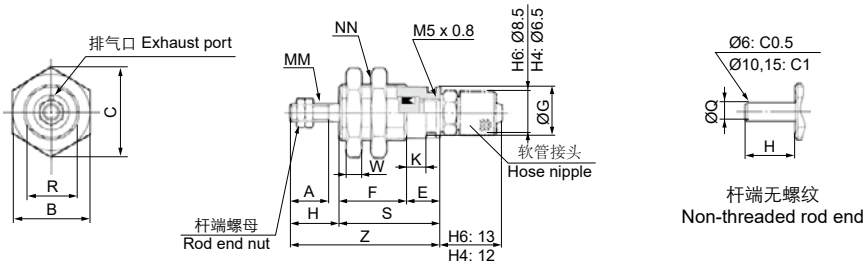

KCJPS (Ø6~Ø15)

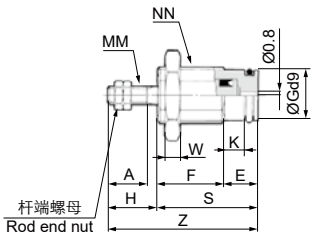

缸径 Bore size	A	B	C	E (E1)	F(F1)			G	H	K	MM	NN	R	S			W	Z			Q
					ST=5	ST=10	ST=15							ST=5	ST=10	ST=15		ST=5	ST=10	ST=15	
4	6	10	11.5	3(6)	13(10)	21(18)	29(26)	6.5	7.5	3.5	M2x0.4	M8x1.0	7	16	24	32	3	23.5	31.5	39.5	2
6	7	12	13.9	6	12.5	19.5	26.5	8.5	9	3.5	M3x0.5	M10x1.0	9	18.5	25.5	32.5	3	27.5	34.5	41.5	3
10	10	19	22	6	14.5	21	28	12	12	3.5	M4x0.7	M15x1.5	13	20.5	27	34	4	32.5	39	46	5
15	12	27	31	7	16.5	22.5	29	19	14	4.2	M5x0.8	M22x1.5	20	23.5	29.5	36	5	37.5	43.5	50	6

ARK 微型气缸
Miniature Air Cylinder
Series KCJP2 (Ø4~Ø16)

规格 Specifications

缸径 Bore size (mm)	4	6	10	16
接管口径 Port size Rc(PT)	M3x0.5			M5x0.8
使用流体 Fluid	过滤压缩空气 Filtered compressed air			
动作形式 Action	双动 Double acting			
保证耐压力 Proof pressure (MPa)	1.0			
使用压力范围 Operating pressure range (MPa)	0.15~0.7	0.12~0.7	0.06~0.7	
环境及流体温度 Ambient and fluid temperature	-5~60℃ (未冻结 No freezing)			
活塞速度 Piston speed (mm/s)	50~500	10~500		
缓冲 Cushion	橡胶缓冲 Rubber bumper			
行程公差 Stroke tolerance (mm)	$^{+1.0}_{0}$			
* 润滑 Lubrication	不需要 Not required			

* 如需要润滑请使用透平 1 号油 ISOVG32。Please use Turbine oil 1st Grade ISOVG32 if necessary.

行程 / 磁性开关 Stroke/ Auto switch

缸径 Bore size (mm)	标准行程 Standard stroke (mm)	磁性开关 Auto switch	固定夹 Switch clamp
4	5, 10, 15, *20	D-M9BK	-
6	5, 10, 15, 20, 25		
10, 16	5, 10, 15, 20, 25, 30, 35, 40		

*Ø4 行程 20 仅无磁环类型。20 stroke of Ø4 bore size is none magnet type only.

型号表示方法 How to Order

KC [D] JP2 [B] [6] - [20] D [B] [ ]

磁环 Magnet

-	无 None
D	内置磁环 Built-in magnet

安装形式 Mounting

B	基本型 Basic	(Ø4~Ø16)
L	脚座 Foot	(Ø6~Ø16)
F	前法兰 Front flange	
D	耳环 Clevis	
T	轴耳 Trunnion	

缸径 Bore size (mm)

行程 Stroke (mm)

动作形式 Action

D	双动 Double acting

杆端螺纹 Rod end thread

-	外螺纹 Male thread
B	无螺纹 None

附件 Accessory

-	无 None	
I	I 型单肘节接头 I type single knuckle joint	仅杆端外螺纹形式 Only rod end male thread (Ø6~Ø16)
Y	Y 型双肘节接头 Y type double knuckle joint	

3

微型气缸
Miniature Air Cylinder
Series KCJP2

外形尺寸图 Dimensions (mm)

KC(D)JP2B4

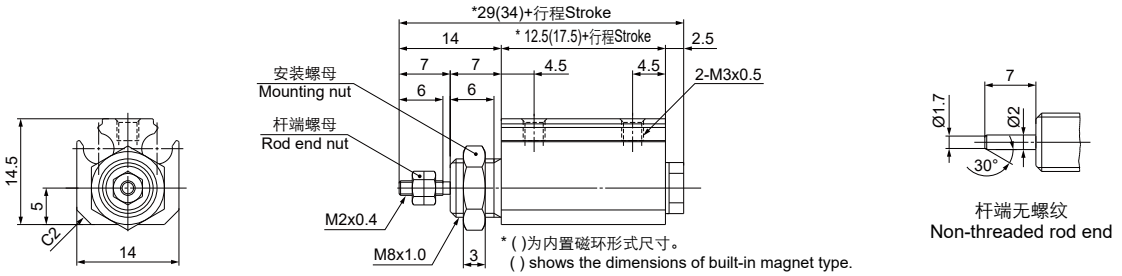

KC(D)JP2B (Ø6~Ø16)

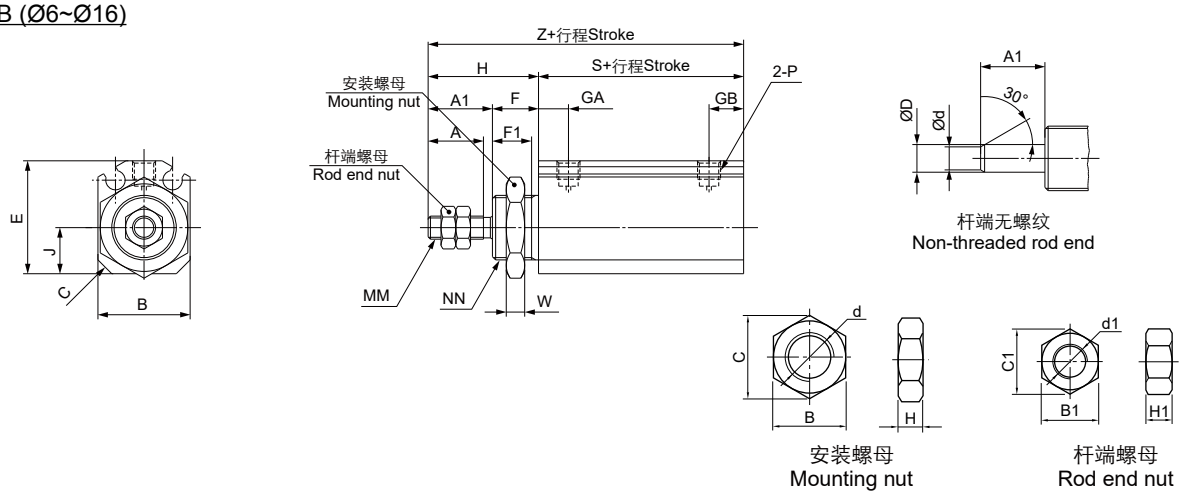

缸径 Bore size	A	A1	B	C	D	d	E	F	F1	GA	GB	H	J	MM	NN	P	S	W	Z
6	7	9	14	2	3	2	16.5	8	6.5	5.5	6.5	17	6	M3x0.5	M10x1.0	M3x0.5	16(21)	3	33(38)
10	10	12	15	2.5	4	3	19	8	6.5	6	7	20	7	M4x0.7	M12x1.0	M3x0.5	19.5(24.5)	3	39.5(44.5)
16	12	14	20	3	6	5	24.5	10	8.5	6.5	7.5	24	10	M5x0.8	M14x1.0	M5x0.8	19.5(24.5)	4	43.5(48.5)

* ( ) 为内置磁环形式尺寸。( ) shows the dimensions of built -in magnet type.

缸径 Bore size	B	C	d	H	B1	C1	d1	H1
4	10	11.5	M8x1.0	3	4	4.6	M2x0.4	1.6
6	14	16.2	M10x1.0	3	5.5	6.4	M3x0.5	1.8
10	17	19.6	M12x1.0	3	7	8.1	M4x0.7	2.4
16	19	21.9	M14x1.0	4	8	9.2	M5x0.8	3.2

KC(D)JP2F (Ø6~Ø16)

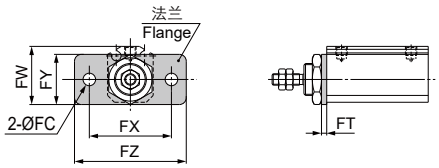

零件号 Part No.	缸径 Bore size	FC	FT	FW	FX	FY	FZ
FCJP-F06	6	3.4	1.6	18.5	24	16	32
FCJP-F10	10	4.5	1.6	21	28	18	37
FCJP-F16	16	5.5	2.3	25.5	36	22	49

* 未标注尺寸与基本型相同。The unmentioned dimensions are same as the Basic type.

KC(D)JP2L (Ø6~Ø16)

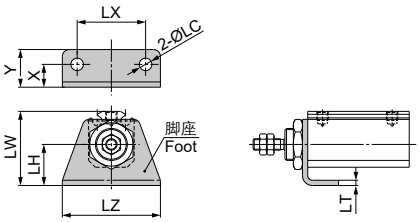

零件号 Part No.	缸径 Bore size	X	Y	LC	LH	LT	LW	LX	LZ
FCJP-L06	6	6.5	10.5	3.4	11	1.6	21.5	20	28
FCJP-L10	10	7	12	4.5	13	1.6	25	24	33
FCJP-L16	16	10	16.5	5.5	18	2.3	32.5	30	43

* 未标注尺寸与基本型相同。
The unmentioned dimensions are same as the Basic type.

微型气缸
Miniature Air Cylinder
Series KCJP2

外形尺寸图 Dimensions (mm)

KC(D)JP2D (Ø6~Ø16)

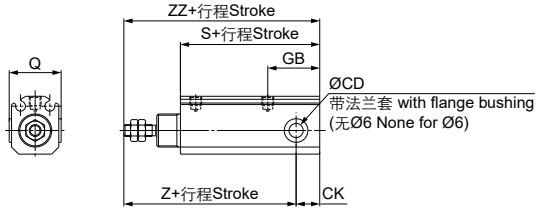

零件号 Part No.	缸径 Bore size	CD	CK	GB	Q	S	Z	ZZ
FCJP-D06	6	$3^{+0.040}_{0}$	4	11.5	-	21(26)	34(39)	38(43)
FCJP-D10	10	$5^{+0.065}_{0}$	6.5	18	$17^{0}_{-0.5}$	30.5(35.5)	44(49)	50.5(55.5)
FCJP-D16	16	$6^{+0.065}_{0}$	10	22	$22^{0}_{-0.5}$	34(39)	48(53)	58(63)

*1). 未标注尺寸与基本型相同。
The unmentioned dimensions are same as the Basic type.
*2).( ) 为内置磁环形式尺寸。
( ) shows the dimensions of built-in magnet type.

KC(D)JP2T (Ø6~Ø16)

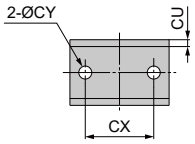

轴耳接座安装尺寸
Mounting dimensions of trunnion bracket

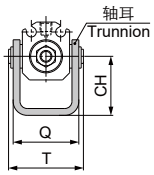

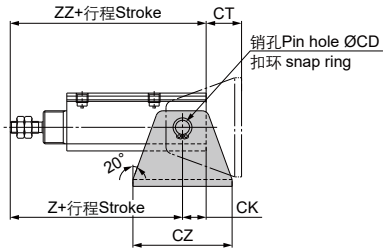

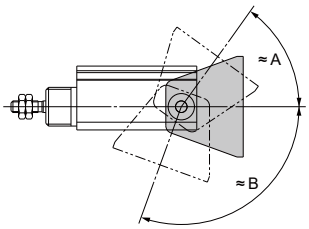

零件号 Part No.	缸径 Bore size	CD	CH	CK	CT	CU	CX	CY	CZ	Q	T	Z	ZZ	摆动角度 Rotation angle	
														A	B
FCJP-T06	6	3	16	4	12	1.6	18	3.4	26	18.5	20.4	34(39)	38(43)	54°	110°
FCJP-T10	10	5	20	6.5	13.5	1.6	24	4.5	33	20.5	23.9	44(49)	50.5(55.5)	62°	110°
FCJP-T16	16	6	25	10	15	2.9	29	5.5	42	28	31.7	48(53)	58(63)	55°	102°

*1). 未标注尺寸与基本型相同。The unmentioned dimensions are same as the Basic type.
*2). ( ) 为内置磁环形式尺寸。( ) shows the dimensions of built-in magnet type.

附件 Accessories

I型单肘节接头 I type single kunckle joint

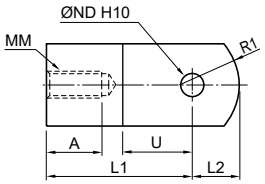

Y型双肘节接头 Y type double kunckle joint

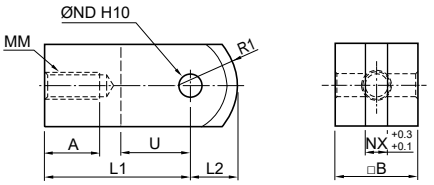

零件号 Part No.		缸径 Bore size	A	B	L1	L2	MM	ND	NX	R1	U1
I	Y										
FI-P006A	FY-P006A	6	5	6	12	3.5	M3x0.5	$3^{+0.040}_{0}$	3	5	5
FI-P010A	FY-P010A	10	6.5	10	16	5.5	M4x0.7	$5^{+0.048}_{0}$	5	8	7
FI-P016A	FY-P016A	16	7	12	19	7	M5x0.8	$6^{+0.048}_{0}$	6	10	9

肘节接头销子 Knuckle pin　　轴耳销子 Trunnion pin

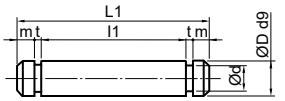

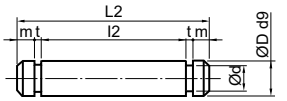

零件号 Part No.		缸径 Bore size	d	D	l1	l2	L1	L2	m	t
肘节 Knuckle	轴耳 Trunnion									
FIY-P006	FCT-P006	6	2.85	$3^{-0.020}_{-0.045}$	6.2	17.6	9	20.4	0.75	0.65
FIY-P010	FCT-P010	10	4.8	$5^{-0.03}_{-0.06}$	10.2	20.5	13.6	23.9	1	0.7
FIY-P016	FCT-P016	16	5.7	$6^{-0.03}_{-0.06}$	12.2	28.1	15.8	31.7	1	0.8

杆端螺帽 Rod end cap

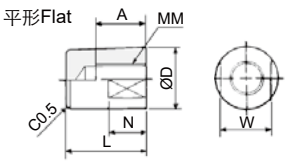

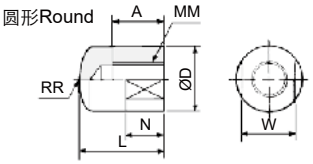

零件号 Part No.		缸径 Bore size	A	D	L	MM	N	RR	W
平形 Flat	圆形 Round								
CJ-CF004	CJ-CR004	4	5	6	9	M2x0.4	3	6	5
CJ-CF006	CJ-CR006	6	6	8	11	M3x0.5	5	8	6
CJ-CF010	CJ-CR010	10	8	10	13	M4x0.7	6	10	8
CJ-CF016	CJ-CR016	16	10	12	15	M5x0.8	7	12	10

ARK

标准微型气缸
Standard Miniature Air Cylinder
Series KCJ2 (Ø10~Ø16)

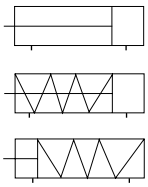

规格 Specifications

缸径 Bore size (mm)		10	16
接管口径 Port size Rc(PT)		M5x0.8	
使用流体 Fluid		过滤压缩空气 Filtered compressed air	
动作形式 Action		双动 / 单动 Double acting/ Single acting	
保证耐压力 Proof pressure (MPa)		1.0	
使用压力范围 Operating pressure range (MPa)	双动 Double acting	0.06~0.7	
	单动 Single acting	0.15~0.7	
环境及流体温度 Ambient and fluid temperature		-5~60℃ (未冻结 No freezing)	
活塞速度 Piston speed		50~750 mm/s	
缓冲 Cushion		橡胶缓冲 Rubber bumper	
行程公差 Stroke tolerance (mm)		$^{+1.0}_{0}$	
* 润滑 Lubrication		不需要 Not required	

* 如需要润滑请使用透平 1 号油 ISOVG32。Please use Turbine oil 1st Grade ISOVG32 if necessary.

行程 / 磁性开关 Stroke/ Auto switch

缸径 Bore size (mm)	标准行程 Standard stroke (mm)	磁性开关 / 固定钢带 Auto switch/ Band mounting
10	15, 30, 45, 60, 75, 100, 125, 150	D-M9BK/ PBC-S
16	15, 30, 45, 60, 75, 100, 125, 150, 175, 200	

* 非标行程可定制。Nonstandard stroke can be customized.

型号表示方法 How to Order

KC [D] J2 [B] [10] - [60] [S] [ ]

磁环 Magnet

-	无 None
D	内置磁环 Built-in magnet

安装形式 Mounting

B	基本型 Basic
L	脚座 Foot
F	前法兰 Front flange
D	双 U 型钩 Double clevis

缸径 Bore size (mm)

行程 Stroke (mm)

动作形式 Action

-	双动 Double acting
S	单动 (弹簧压回) Single acting (Spring return)
T	单动 (弹簧压出) Single acting (Spring extend)

附件 Accessory

-	无 None
I	I 型单肘节接头 I type single knuckle joint
Y	Y 型双肘节接头 Y type double knuckle joint

标准微型气缸
Standard Miniature Air Cylinder
Series KCJ2

外形尺寸图 Dimensions (mm)

KC(D)J2B

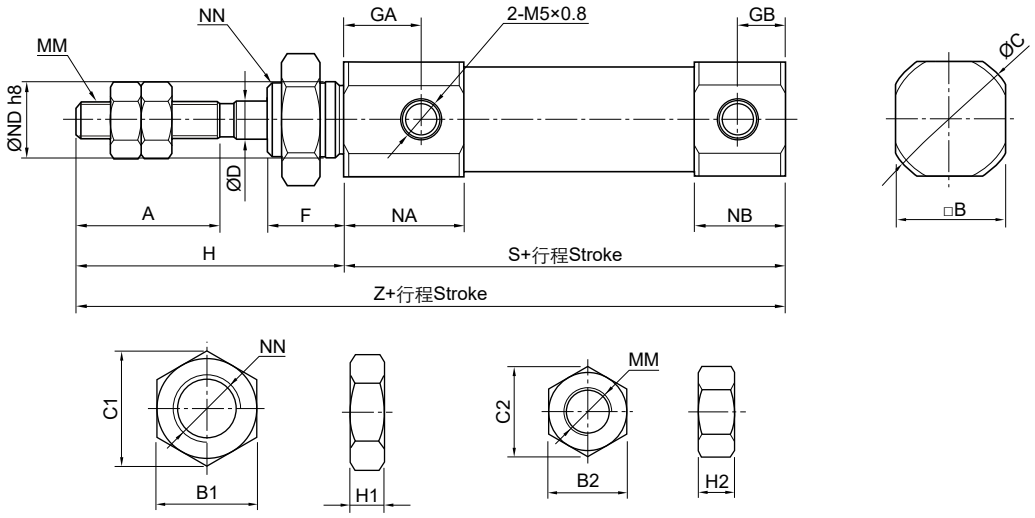

缸径 Bore size	A	B	B1	B2	C	C1	C2	D	F	GA	GB	H	H1	H2	MM	NA	NB	ND	NN	S	Z
10	15	12	11	7	14	12.7	8.1	4	8	8	5	28	4	3.2	M4x0.7	12.5	9.5	$8^{0}_{-0.022}$	M8x1.0	46	74
16	15	18	14	8	20	16.2	9.2	5	8	8	5	28	4	4	M5x0.8	12.5	9.5	$10^{0}_{-0.022}$	M10x1.0	47	75

KC(D)J2L

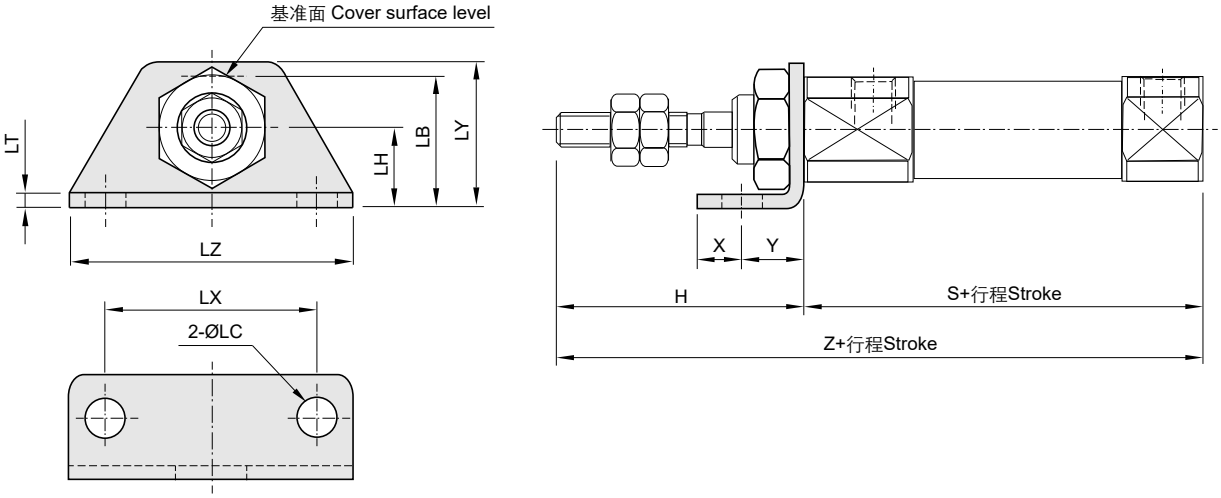

零件号 Part No.	缸径 Bore size	H	LB	LC	LH	LT	LX	LY	LZ	S	X	Y	Z
FCJ-L010B	10	28	15	4.5	9	1.6	24	16.5	32	46	5	7	74
FCJ-L016B	16	28	23	5.5	14	2.3	33	25	42	47	6	9	75

* 未标注尺寸与基本型相同。The unmentioned dimensions are same as the Basic type.

标准微型气缸
Standard Miniature Air Cylinder
Series KCJ2

外形尺寸图 Dimensions (mm)

KC(D)J2F

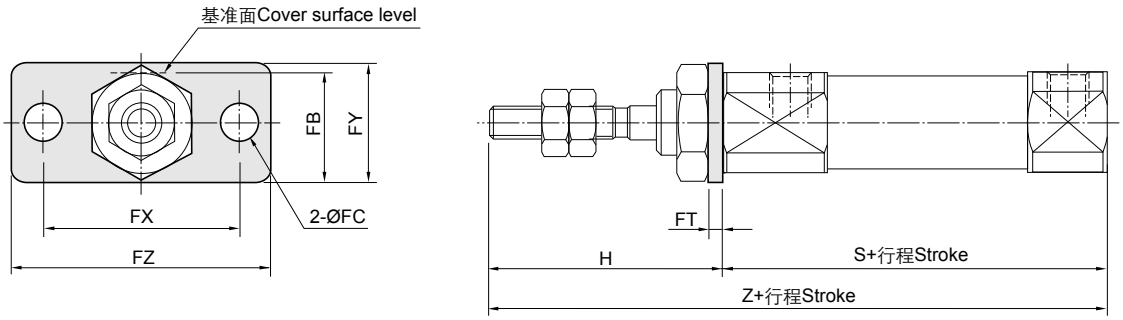

零件号 Part No.	缸径 Bore size	FB	FC	FT	FX	FY	FZ	H	S	Z
FCJ-F010B	10	13	4.5	1.6	24	14	32	28	46	74
FCJ-F016B	16	19	5.5	2.3	33	20	42	28	47	75

* 未标注尺寸与基本型相同。The unmentioned dimensions are same as the Basic type.

KC(D)J2D

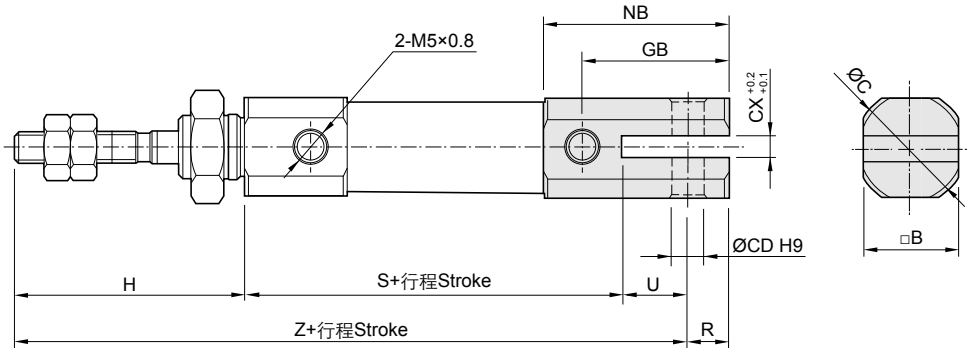

零件号 Part No.	缸径 Bore size	B	C	CD	CX	GB	H	NB	R	S	U	Z
FCJ-D010B	10	12	14	3.3	3.2	18	28	22.5	5	46	8	82
FCJ-D016B	16	18	20	5	6.5	23	28	27.5	8	47	10	85

* 未标注尺寸与基本型相同。The unmentioned dimensions are same as the Basic type.

KC(D)J2B-S

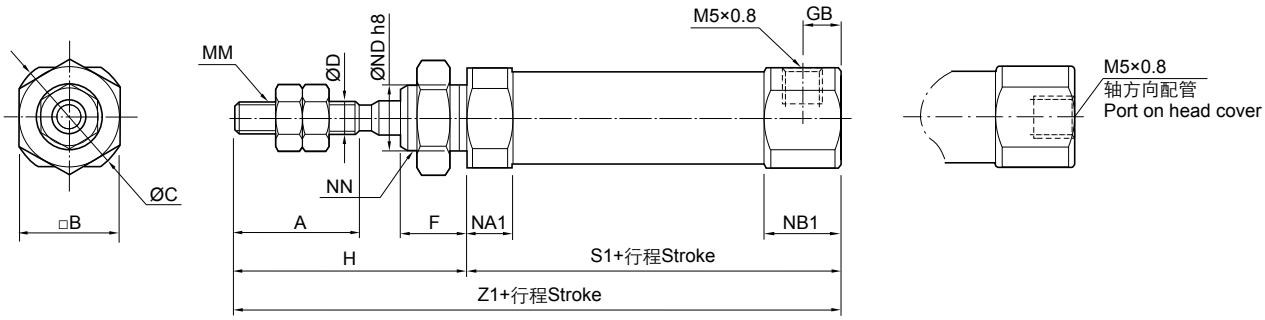

3

标准微型气缸
Standard Miniature Air Cylinder
Series KCJ2

外形尺寸图 Dimensions (mm)

KC(D)J2B-T

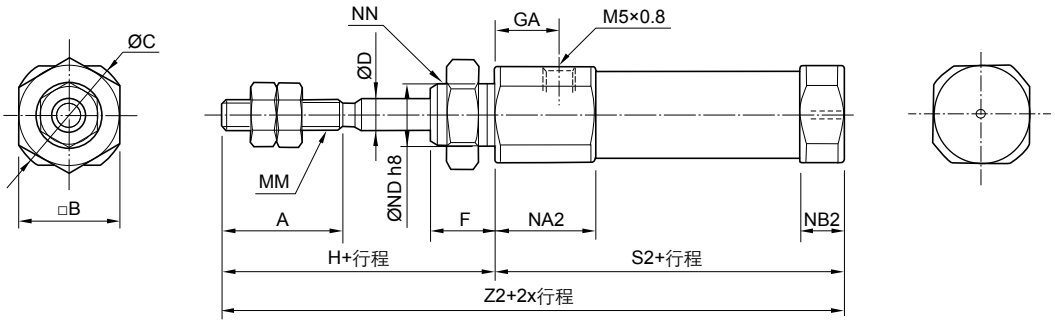

缸径 Bore size	A	B	C	D	F	GA	GB	H	MM	NA1	NB1	NA2	NB2	ND	NN
10	15	12	14	4	8	8	5	28	M4x0.7	4.8	9.5	12.5	4.8	$8^{0}_{-0.022}$	M8x1.0
16	15	18	20	5	8	8	5	28	M5x0.8	4.8	9.5	12.5	4.8	$10^{0}_{-0.022}$	M10x1.0

行程 Stroke / 缸径 Bore size	5~15		16~30		31~45		46~60		61~75		76~100		101~125		126~150	
	S1	Z1	S1	Z1	S1	Z1	S1	Z1	S1	Z1	S1	Z1	S1	Z1	S1	Z1
10	45.5	73.5	53	81	65	93	77	105	-	-	-	-	-	-	-	-
16	45.5	73.5	54	82	66	94	78	106	84	112	108	136	126	154	138	166

行程 Stroke / 缸径 Bore size	5~15		16~30		31~45		46~60		61~75		76~100		101~125		126~150	
	S2	Z2	S2	Z2	S2	Z2	S2	Z2	S2	Z2	S2	Z2	S2	Z2	S2	Z2
10	48.5	76.5	56	84	68	96	80	108	-	-	-	-	-	-	-	-
16	48.5	76.5	57	85	69	97	81	109	87	115	111	139	129	157	141	169

附件 Accessories

I型单肘节接头 I type single kunckle joint

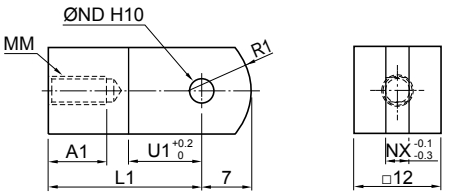

零件号 Part No.	缸径 Bore size	A1	L1	MM	ND	NX	R1	U1
FI-J010B	10	8	21	M4x0.7	$3.3^{+0.048}_{0}$	3.1	8	9
FI-J016B	16	8	25	M5x0.8	$5^{+0.048}_{0}$	6.4	12	14

Y型双肘节接头 Y type double kunckle joint

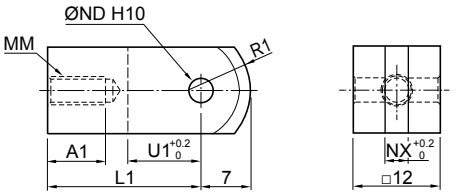

零件号 Part No.	缸径 Bore size	A1	L1	MM	ND	NX	R1	U1
FY-J010B	10	8	21	M4x0.7	$3.3^{+0.048}_{0}$	3.2	8	10
FY-J016B	16	11	21	M5x0.8	$5^{+0.048}_{0}$	6.5	12	10

销子 Pin

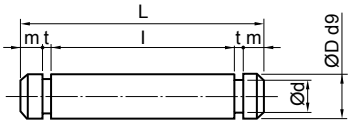

适用Y型双肘节接头Applicable for Y type double knuckle joint

零件号 Part No.	缸径 Bore size	d	D	l	L	m	t
FIY-J010	10	3	$3.3^{-0.03}_{-0.06}$	12.2	15.2	1.2	0.3
FIY-J016	16	4.8	$5^{-0.03}_{-0.06}$	12.2	16.6	1.5	0.7

ARK

标准型气缸(内置磁环)
Standard Air Cylinder (Built-in Magnet)
Series KCM2 (Ø20~Ø40)

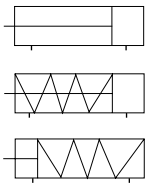

规格 Specifications

缸径 Bore size (mm)	20	25	32	40
接管口径 Port size Rc(PT)	1/8			1/4
使用流体 Fluid	过滤压缩空气 Filtered compressed air			
动作形式 Action	双动 / 单动 Double acting/ Single acting			
保证耐压力 Proof pressure (MPa)	1.5			
使用压力范围 Operating pressure range (MPa)	0.05~1.0			
环境及流体温度 Ambient and fluid temperature	-5~60℃ (未冻结 No freezing)			
活塞速度 Piston speed	50~500 mm/s			
缓冲 Cushion	橡胶缓冲 (标准) Rubber bumper (Standard) 气缓冲 (可选) Air cushion (Option)			
行程公差 Stroke tolerance (mm)	$^{+1.4}_{0}$			
* 润滑 Lubrication	不需要 Not required			

* 如需要润滑请使用透平 1 号油 ISOVG32。Please use Turbine oil 1st Grade ISOVG32 if necessary.

行程 / 磁性开关 Stroke/ Auto switch

缸径 Bore size (mm)	标准行程 Standard stroke (mm)	磁性开关 / 固定钢带 Auto switch/ Band mounting
20, 25, 32, 40	25, 50, 75, 100, 125, 150, 200, 250, 300	D-M9BK/ PBC-S

* 非标行程可定制。Nonstandard stroke can be customized.

型号表示方法 How to Order

KCM2 [W] [B] [25] - [50] [A] [S] [Y]

活塞杆形式 Rod type

-	单活塞杆 Single rod
W	双活塞杆 Double rod

安装形式 Mounting

B	基本型 Basic
L	脚座 Foot
F	前法兰 Front flange
G	后法兰 Rear flange
C	单 U 型钩 Single clevis
D	双 U 型钩 Double clevis
E	原装单 U 型钩 Integrated single clevis
U	前轴耳 Front trunnion
T	后轴耳 Rear trunnion
N	无尾型 End plain
S	尾部 U 型钩支架 Rear clevis bracket

缸径 Bore size (mm)

行程 Stroke (mm)

缓冲 Cushion

-	橡胶缓冲 Rubber bumper
A	气缓冲 Air cushion

动作形式 Action

-	双动 Double acting
S	单动 (弹簧压回) Single acting (Spring return)
T	单动 (弹簧压出) Single acting (Spring extend)

附件 Accessory

-	无 None
I	I 型单肘节接头 I type single knuckle joint
Y	Y 型双肘节接头 Y type double knuckle joint

3

标准型气缸(内置磁环)
Standard Air Cylinder (Built-in Magnet)
Series KCM2

外形尺寸图 Dimensions (mm)

KCM2B

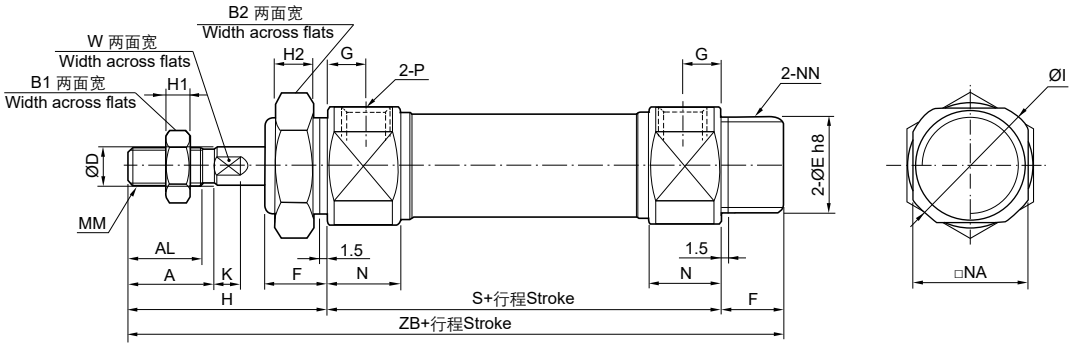

KCM2N

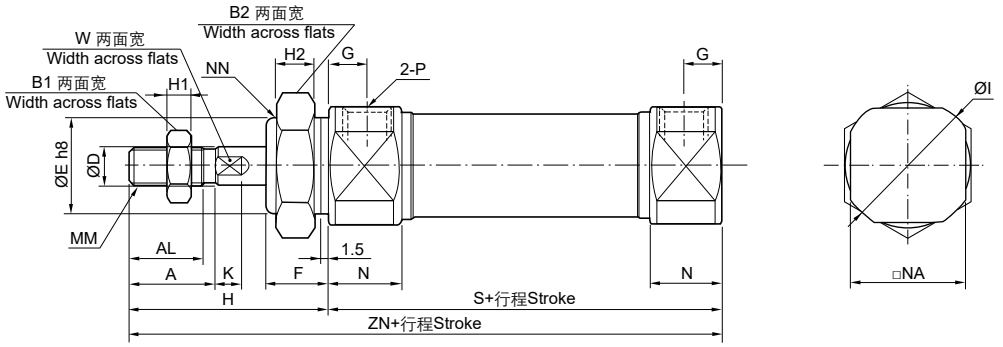

KCM2E

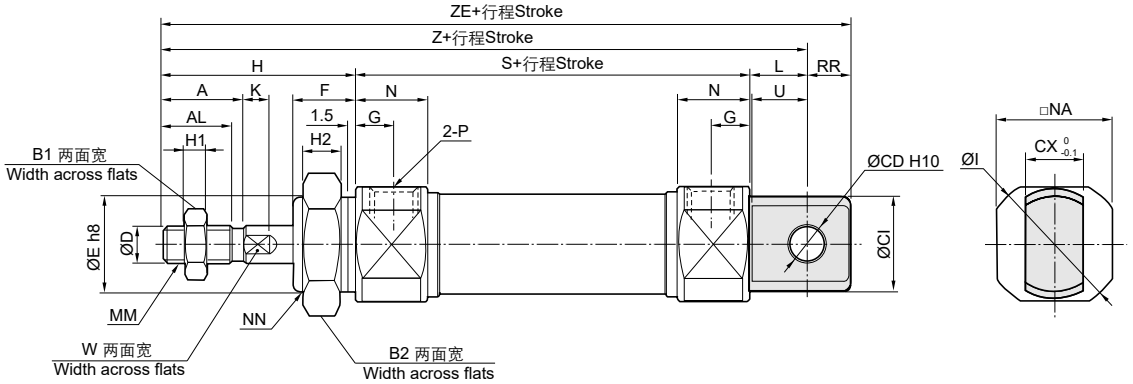

缸径 Bore size	A	AL	B1	B2	CD	CI	CX	D	E	F	G	H	H1	H2	I	K	L	MM	N	NA	NN	P	RR	S	U	W	Z	ZB	ZE	ZN
20	18	15.5	13	26	8	20	12	8	$20^{0}_{-0.03}$	13	8	41	5	8	27.6	5	12	M8x1.25	14.5	24	M20x1.5	1/8	9	62	11.5	6	115	116	124	103
25	22	19.5	17	32	8	22	12	10	$26^{0}_{-0.03}$	13	8	45	6	8	33	5.5	12	M10x1.25	14.5	30	M26x1.5	1/8	9	62	11.5	8	119	120	128	107
32	22	19.5	17	32	10	27	20	12	$26^{0}_{-0.03}$	13	8	45	6	8	36.8	5.5	15	M10x1.25	14.5	34.5	M26x1.5	1/8	12	64	14.5	10	124	122	136	109
40	24	21	22	41	10	33	20	14	$32^{0}_{-0.04}$	16	11	50	8	10	45.8	7	15	M14x1.5	21	42.5	M32x2.0	1/4	12	88	14.5	12	153	154	165	138

标准型气缸(内置磁环)
Standard Air Cylinder (Built-in Magnet)
Series KCM2

外形尺寸图 Dimensions (mm)

KCM2WB

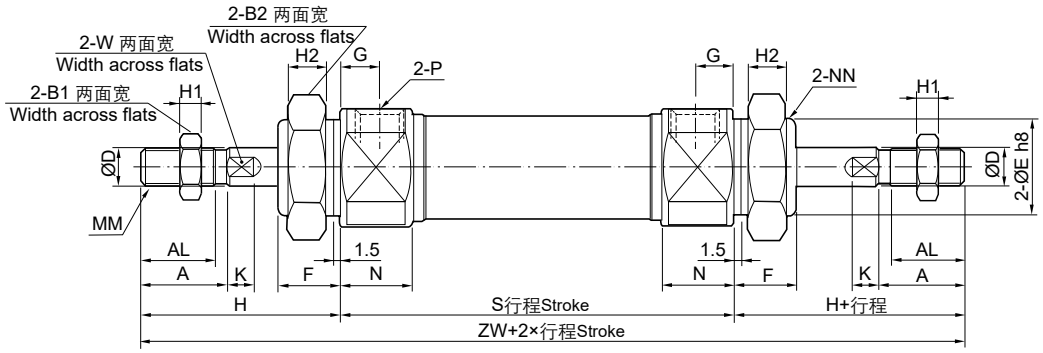

KCM2B-S

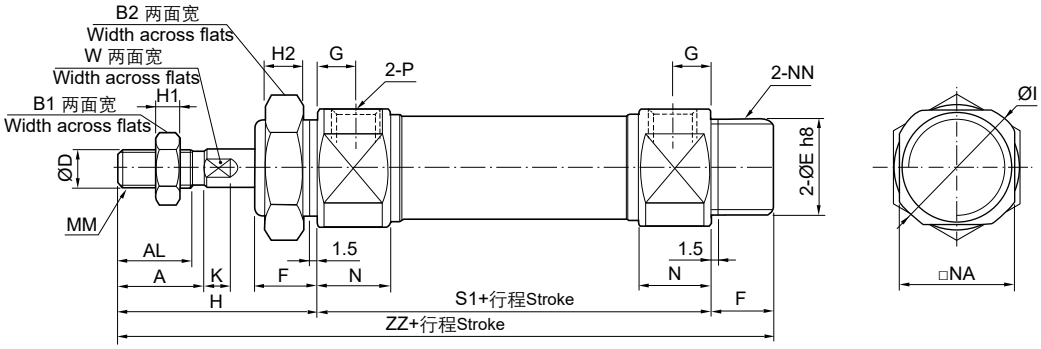

KCM2B-T

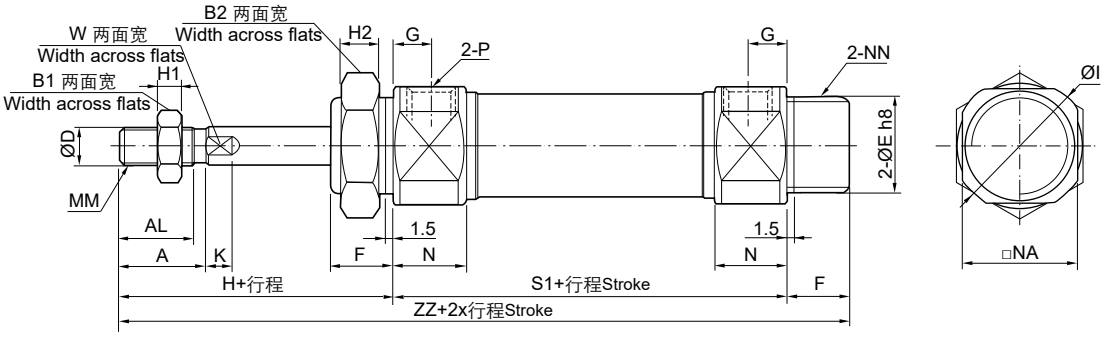

缸径 Bore size	A	AL	B1	B2	D	E	F	G	H	H1	H2	I	K	MM	N	NA	NN	P	S	W	ZW
20	18	15.5	13	26	8	$20^{0}_{-0.03}$	13	8	41	5	8	27.6	5	M8x1.25	14.5	24	M20x1.5	1/8	62	6	144
25	22	19.5	17	32	10	$26^{0}_{-0.03}$	13	8	45	6	8	33	5.5	M10x1.25	14.5	30	M26x1.5	1/8	62	8	152
32	22	19.5	17	32	12	$26^{0}_{-0.03}$	13	8	45	6	8	36.8	5.5	M10x1.25	14.5	34.5	M26x1.5	1/8	64	10	154
40	24	21.0	22	41	14	$32^{0}_{-0.04}$	16	11	50	8	10	45.8	7	M14x1.5	21	42.5	M32x2.0	1/4	88	12	188

行程 Stroke / 缸径 Bore size	1~50		51~100		101~150	
	S1	ZZ	S1	ZZ	S1	ZZ
20	87	141	112	166	137	191
25	87	145	112	170	137	195
32	89	147	114	172	139	197
40	113	179	138	204	163	229

标准型气缸(内置磁环)
Standard Air Cylinder (Built-in Magnet)
Series KCM2

外形尺寸图 Dimensions (mm)

KCM2L

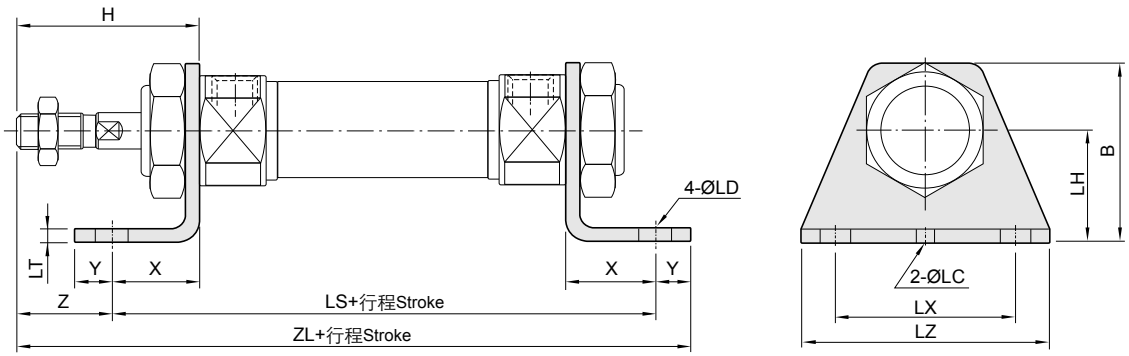

零件号 Part No.	缸径 Bore size	B	H	LC	LD	LH	LS	LT	LX	LZ	X	Y	Z	ZL
FCM-L020B	20	40	41	4	6.8	25	102	3.2	40	55	20	8	21	131
FCM-L032B	25	47	45	4	6.8	28	102	3.2	40	55	20	8	25	135
FCM-L032B	32	47	45	4	6.8	28	104	3.2	40	55	20	8	25	137
FCM-L040B	40	54	50	4	7	30	134	3.2	55	75	23	10	27	171

* 未标注尺寸与基本型相同。The unmentioned dimensions are same as the Basic type.

KCM2F

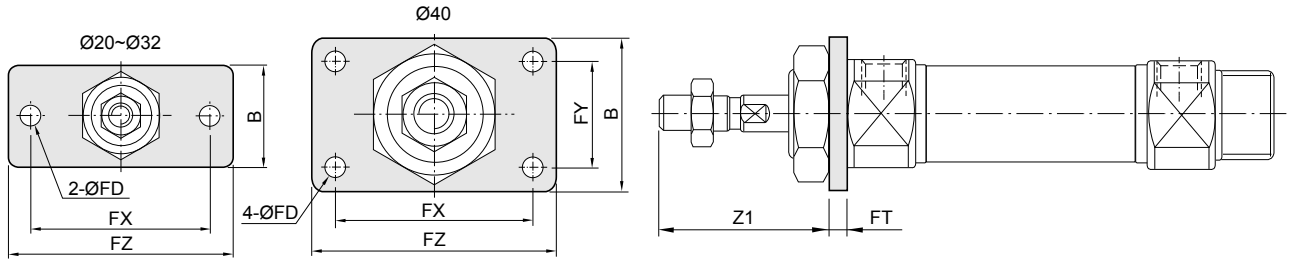

KCM2G

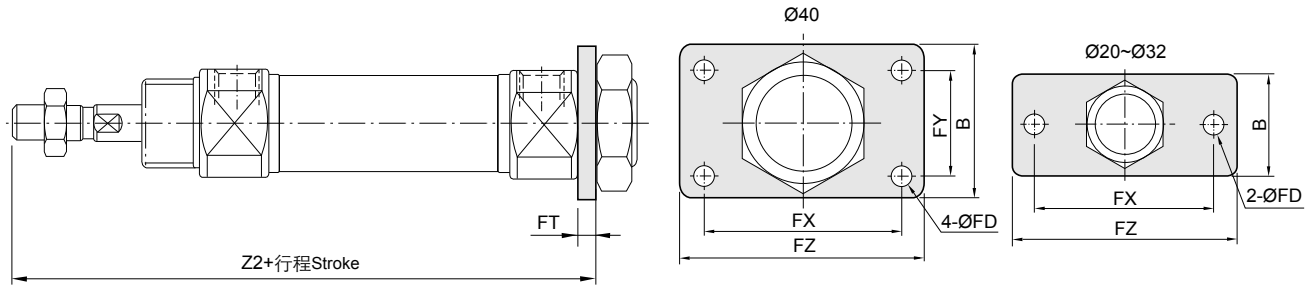

零件号 Part No.	缸径 Bore size	B	FD	FT	FX	FY	FZ	Z1	Z2
FCM-F020B	20	34	7	4	60	-	75	37	107
FCM-F032B	25	40	7	4	60	-	75	41	111
FCM-F032B	32	40	7	4	60	-	75	41	113
FCM-F040B	40	52	7	5	66	36	82	45	143

* 未标注尺寸与基本型相同。
The unmentioned dimensions are same as the Basic type.

标准型气缸(内置磁环)
Standard Air Cylinder (Built-in Magnet)
Series KCM2

外形尺寸图 Dimensions (mm)

KCM2C

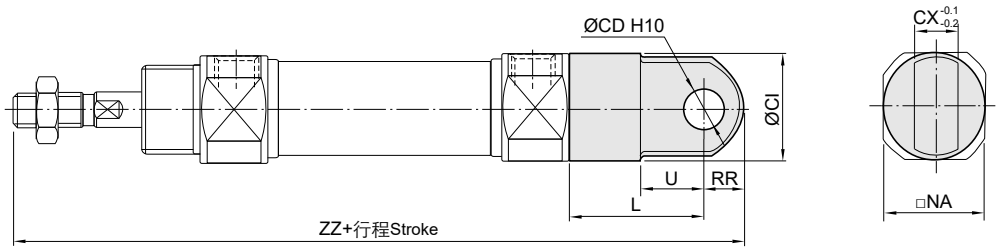

KCM2D

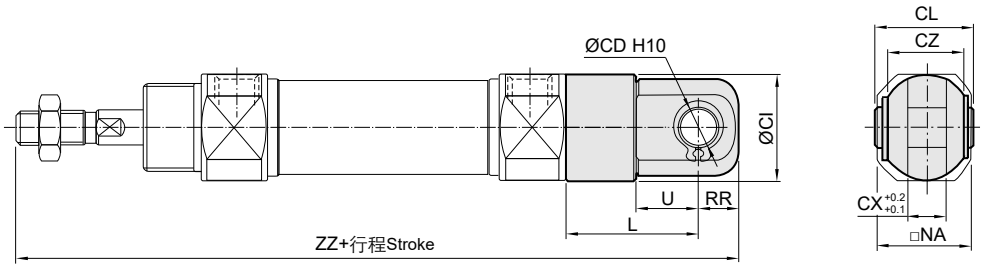

零件号 Part No.		缸径 Bore size	CD	CI	CL	CX	CZ	L	NA	RR	U	ZZ
单 U 型钩 Single clevis	双 U 型钩 Double clevis											
FCM-C020B	FCM-D020B	20	9	24	25	10	19	30	24	9	14	142
FCM-C032B	FCM-D032B	25	9	30	25	10	19	30	30	9	14	146
FCM-C032B	FCM-D032B	32	9	30	25	10	19	30	34.5	9	14	148
FCM-C040B	FCM-D040B	40	10	38	41.2	15	30	39	42.5	11	18	188

* 未标注尺寸与基本型相同。The unmentioned dimensions are same as the Basic type.

KCM2U

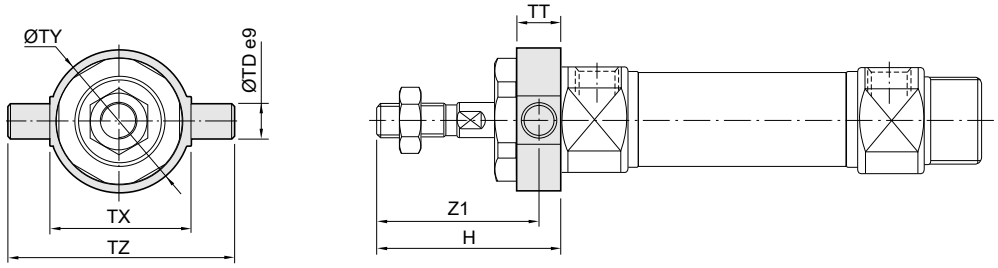

KCM2T

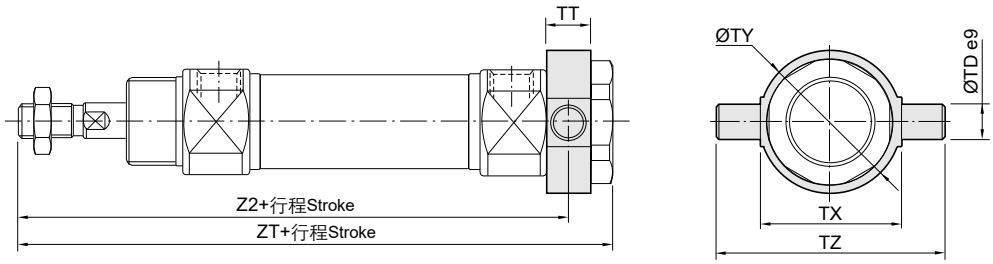

零件号 Part No.	缸径 Bore size	H	TD	TT	TX	TY	TZ	Z1	Z2	ZT
FCM-T020B	20	41	8	10	32	32.5	52	36	108	118
FCM-T032B	25	45	9	10	40	40.5	60	40	112	122
FCM-T032B	32	45	9	10	40	40.5	60	40	114	124
FCM-T040B	40	50	10	11	53	53.5	77	44.5	143.5	154

* 未标注尺寸与基本型相同。The unmentioned dimensions are same as the Basic type.

标准型气缸(内置磁环)
Standard Air Cylinder (Built-in Magnet)
Series KCM2

外形尺寸图 Dimensions (mm)

KCM2S

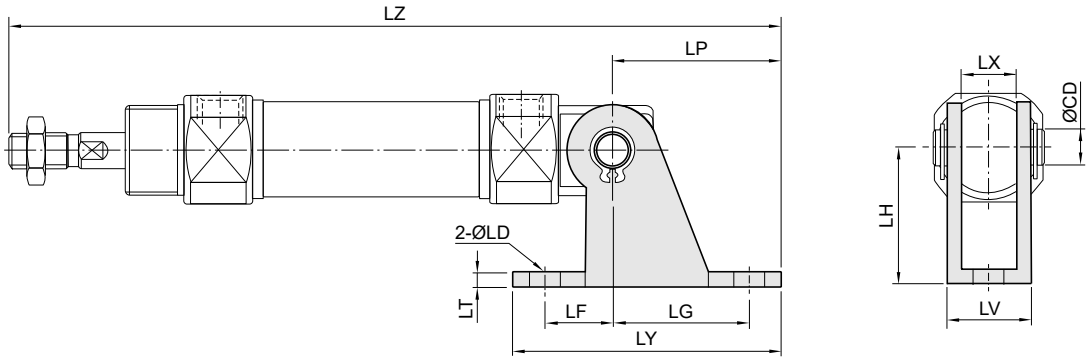

零件号 Part No.	缸径 Bore size	CD	LD	LF	LG	LH	LP	LT	LV	LX	LY	LZ
FCM-E020B	20	8	6.8	15	30	30	37	3.2	18.4	12	59	152
FCM-E025B	25	8	6.8	15	30	30	37	3.2	18.4	12	59	156
FCM-E032B	32	10	9	15	40	40	50	4	28	20	75	174
FCM-E040B	40	10	9	15	40	40	50	4	28	20	75	203

* 未标注尺寸与基本型相同。The unmentioned dimensions are same as the Basic type.

附件 Accessories

I型单肘节接头 I type single kunckle joint

Ø20, Ø25， Ø32

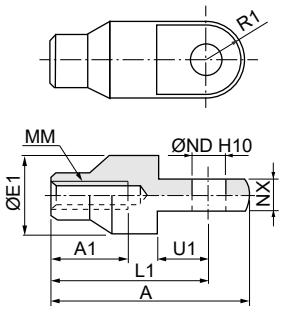

Ø40

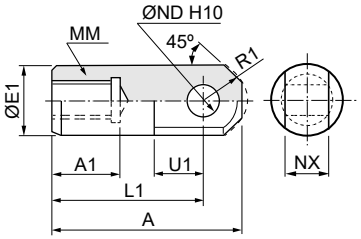

零件号 Part No.	缸径 Bore size	A	A1	E1	L1	MM	ND	NX	R1	U1
FI-020B	20	46	16	20	36	M8x1.25	$9^{+0.058}_{0}$	$9^{-0.1}_{-0.2}$	10	14
FI-032B	25, 32	48	18	20	38	M10x1.25	$9^{+0.058}_{0}$	$9^{-0.1}_{-0.2}$	10	14
FI-040B	40	69	22	24	55	M14x1.5	$12^{+0.07}_{0}$	$16^{-0.1}_{-0.3}$	15.5	20

Y型双肘节接头 Y type double kunckle joint

Ø20, Ø25， Ø32

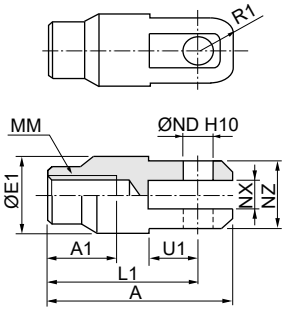

Ø40

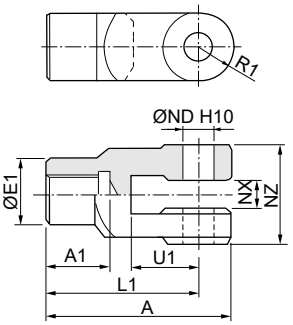

零件号 Part No.	缸径 Bore size	A	A1	E1	L1	MM	ND	NX	NZ	R1	U1
FY-020B	20	46	16	20	36	M8x1.25	$9^{+0.058}_{0}$	$9^{+0.2}_{+0.1}$	18	12	14
FY-032B	25, 32	48	18	20	38	M10x1.25	$9^{+0.058}_{0}$	$9^{+0.2}_{+0.1}$	18	12	14
FY-040B	40	68	22	24	55	M14x1.5	$12^{+0.07}_{0}$	$16^{+0.3}_{+0.1}$	38	13	25

销子 Pin

Ø20, Ø25， Ø32

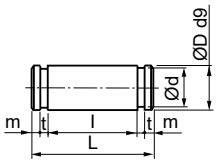

Ø40

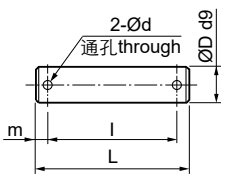

零件号 Part No.	缸径 Bore size	d	D	l	L	m	t	适用附件 Applied to
FCDP-1	20, 25, 32	8.6	9	19.2	25	1.75	1.15	FCM-D020(25, 32)B FY-020(25, 32)B
FCDP-2	40	3	10	33.2	41.2	4	-	FCM-D040B
FCDP-3	40	3	12	41.7	49.7	4	-	FY-040B

杆端螺母 Rod end nut

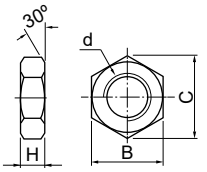

零件号 Part No.	缸径 Bore size	B	C	d	H
FNT-02	20	13	15	M8x1.25	5
FNT-03	25, 32	17	19.6	M10x1.25	6
FNT-04	40	22	25.4	M14x1.5	8

ARK

标准型气缸/直接安装 (内置磁环)
Standard Air Cylinder/ Direct Mount (Built-in Magnet)
Series KCM2R (Ø20~Ø40)

规格 Specifications

缸径 Bore size (mm)	20	25	32	40
接管口径 Port size Rc(PT)	1/8			1/4
使用流体 Fluid	过滤压缩空气 Filtered compressed air			
动作形式 Action	双动 Double acting			
保证耐压力 Proof pressure (MPa)	1.5			
使用压力范围 Operating pressure range (MPa)	0.05~1.0			
环境及流体温度 Ambient and fluid temperature	-5~60℃ (未冻结 No freezing)			
活塞速度 Piston speed	50~500 mm/s			
缓冲 Cushion	橡胶缓冲 Rubber bumper			
行程公差 Stroke tolerance (mm)	$^{+1.4}_{0}$			
* 润滑 Lubrication	不需要 Not required			

* 如需要润滑请使用透平 1 号油 ISOVG32。Please use Turbine oil 1st Grade ISOVG32 if necessary.

行程 / 磁性开关 Stroke/ Auto switch

缸径 Bore size (mm)	标准行程 Standard stroke (mm)	磁性开关 / 固定钢带 Auto switch/ Band mounting
20	25, 50, 75, 100, 125, 150	D-M9BK/ PBC-S
25, 32	25, 50, 75, 100, 125, 150, 200	
40	25, 50, 75, 100, 125, 150, 200, 250, 300	

* 非标行程可定制。Nonstandard stroke can be customized.

型号表示方法 How to Order

KCM2R [A] [32] - [75]

- 行程 Stroke (mm)
- 缸径 Bore size (mm)
- 固定类型 Mounting

A	底面固定型 Bottom mounting
B	前面固定型 Front mounting

3

标准型气缸/直接安装 (内置磁环)
Standard Air Cylinder/ Direct Mount (Built-in Magnet)
Series KCM2R

外形尺寸图 Dimensions (mm)

KCM2RA

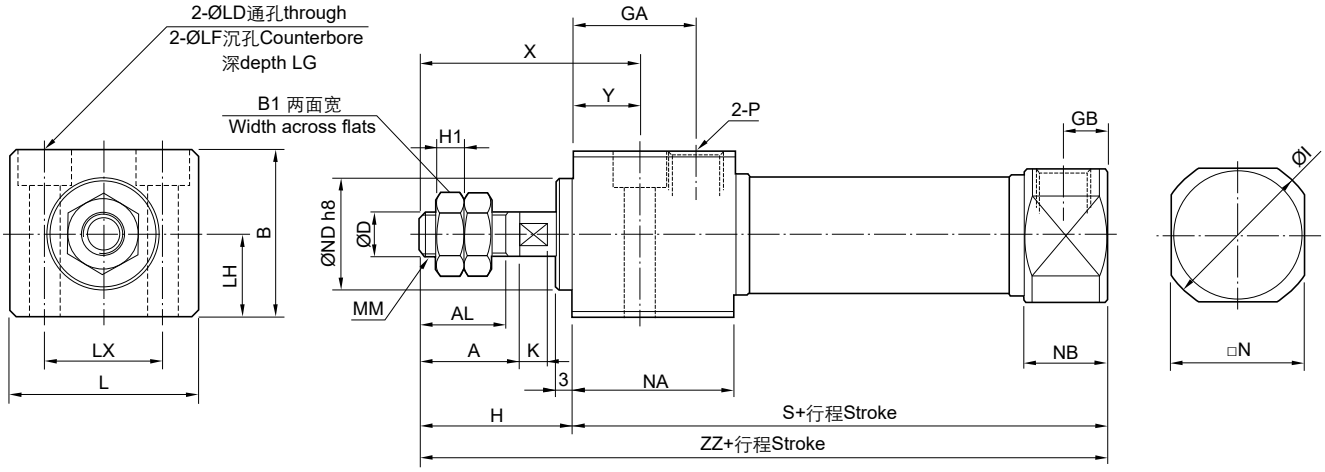

缸径 Bore size	A	AL	B	B1	D	GA	GB	H	H1	I	K	L	LD	LF	LG	LH	LX	MM	N	NA	NB	ND	P	S	X	Y	ZZ
20	18	15.5	30	13	8	22	8	27	5	27.6	5	33.5	5.5	9.5	6.5	15	21	M8x1.25	24	29	14.5	$20^{0}_{-0.033}$	1/8	76	39	12	103
25	22	19.5	36	17	10	22	8	31	6	33	5.5	39	6.6	11	7.5	18	25	M10x1.25	30	29	14.5	$26^{0}_{-0.033}$	1/8	76	43	12	107
32	22	19.5	42	17	12	22	8	31	6	36.8	5.5	47	9	14	10	21	30	M10x1.25	34.5	29	14.5	$26^{0}_{-0.033}$	1/8	78	43	12	109
40	24	21	52	22	14	27	11	34	8	45.8	7	58.5	11	17.5	12.5	26	38	M14x1.5	42.5	37.5	21	$32^{0}_{-0.039}$	1/4	104	49	15	138

KCM2RB

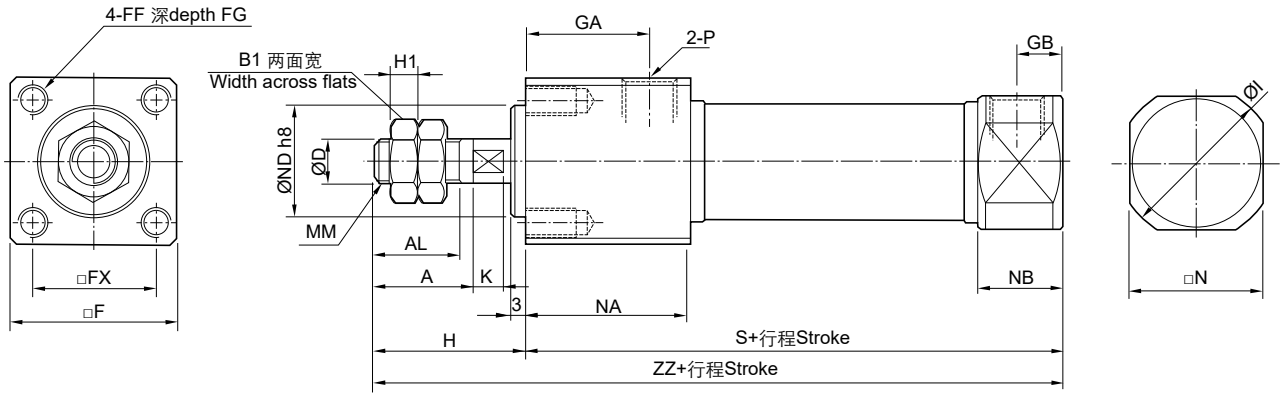

缸径 Bore size	A	AL	B1	D	F	FF	FG	FX	GA	GB	H	H1	I	K	MM	N	NA	NB	ND	P	S	ZZ
20	18	15.5	13	8	30	M5x0.8	9	22	22	8	27	5	27.6	5	M8x1.25	24	29	14.5	$20^{0}_{-0.033}$	1/8	76	103
25	22	19.5	17	10	36	M6x1.0	11	26	22	8	31	6	33	5.5	M10x1.25	30	29	14.5	$26^{0}_{-0.033}$	1/8	76	107
32	22	19.5	17	12	42	M6x1.0	11	30	22	8	31	6	36.8	5.5	M10x1.25	34.5	29	14.5	$26^{0}_{-0.033}$	1/8	78	109
40	24	21	22	14	52	M8x1.25	14	36	27	11	34	8	45.8	7	M14x1.5	42.5	37.5	21	$32^{0}_{-0.039}$	1/4	104	138

ARK

ISO6432标准气缸(内置磁环)
ISO6432 Standard Air Cylinder (Built-in Magnet)
Series KC85 (Ø8~Ø25)

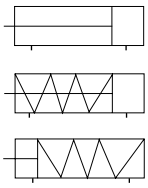

规格 Specifications

缸径 Bore size (mm)	8	10	12	16	20	25
接管口径 Port size	M5x0.8				G1/8	
使用流体 Fluid	过滤压缩空气 Filtered compressed air					
动作形式 Action	双动 / 单动 Double acting/ Single acting					
保证耐压力 Proof pressure (MPa)	1.5					
使用压力范围 Operating pressure range (MPa)	0.1~1.0	0.08~1.0		0.05~1.0		
环境及流体温度 Ambient and fluid temperature	-5~60℃ (未冻结 No freezing)					
活塞速度 Piston speed	50~1500 mm/s					
缓冲 Cushion	橡胶缓冲 (标准) Rubber bumper (Standard) 气缓冲 (可选) Air cushion (Option)					
* 润滑 Lubrication	不需要 Not required					

* 如需要润滑请使用透平 1 号油 ISOVG32。Please use Turbine oil 1st Grade ISOVG32 if necessary.

行程 / 磁性开关 Stroke/ Auto switch

动作方式 Action	缸径 Bore size (mm)	标准行程 Standard stroke (mm)	最长行程 Max. stroke (mm)	磁性开关 / 固定钢带 Auto switch/ Band mounting
单动型 Single acting	16	15, 25, 50, 75, 100	100	D-M9BK/ PBC-S
	20, 25	15, 25, 50, 75, 100, 125, 150	150	
双动型 Double acting	8, 10	10, 25, 40, 50, 80, 100	200	
	12	10, 25, 40, 50, 80, 100, 125, 160, 200	200	
	16, 20, 25	15, 25, 50, 75, 100, 125, 150, 200, 250, 300, 350, 400, 450, 500	900	

* 非标行程可定制。Nonstandard stroke can be customized.

型号表示方法 How to Order

KC85S W B 16 - 50 S A Y

活塞杆形式 Rod type

-	单活塞杆 Single rod
W	双活塞杆 Double rod
BZ	无尾型 End plain

安装形式 Mounting

B	基本型 Basic
L	脚座 Foot
F	前法兰 Front flange
G	后法兰 Rear flange
C	U 型钩座 Clevis bracket

缸径 Bore size (mm)

行程 Stroke (mm)

动作形式 Action

-	双动 Double acting
S	单动 (弹簧压回) Single acting (Spring return)
T	单动 (弹簧压出) Single acting (Spring extend)

缓冲 Cushion

-	橡胶缓冲 Rubber bumper
A	气缓冲 Air cushion

附件 Accessory

-	无 None
I	I 型单肘节接头 I type single knuckle joint
Y	Y 型双肘节接头 Y type double knuckle joint

3

ISO6432标准气缸(内置磁环)
ISO6432 Standard Air Cylinder (Built-in Magnet)
Series KC85

外形尺寸图 Dimensions (mm)

KC85SB

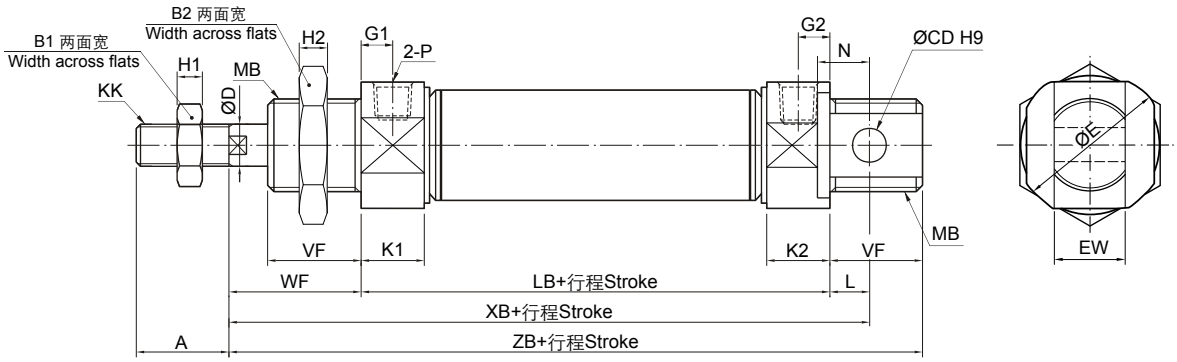

KC85SBZB

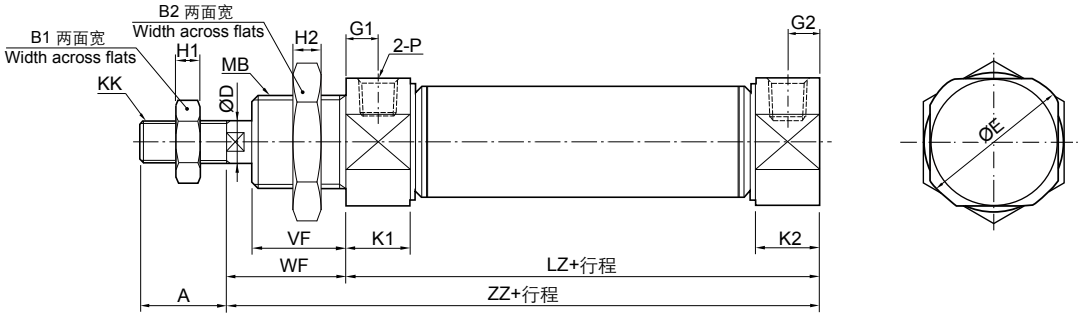

KC85SWB

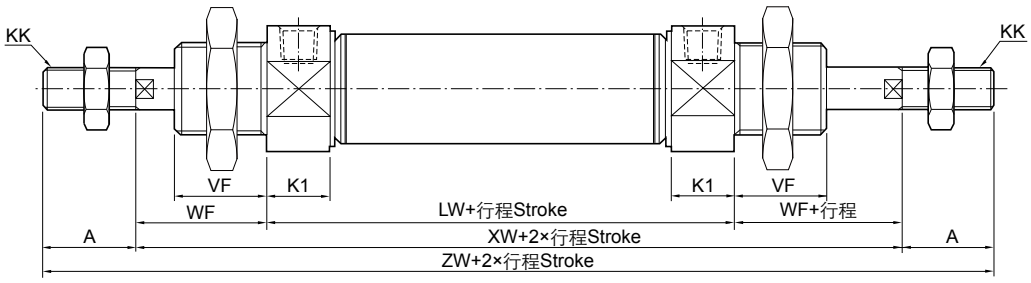

缸径 Bore size	A	B1	B2	CD	D	E	EW	G1	G2	H1	H2	K1	K2	KK	L	LB	LW	LZ	MB	N	P	VF	WF	XB	XW	ZB	ZW	ZZ
8	12	7	19	4	4	16.7	$8^{-0.05}_{-0.4}$	7	5	3.2	6	11.5	9.5	M4x0.7	2	46	48	46	M12x1.25	6	M5x0.8	12	16	64	80	74	104	62
10	12	7	19	4	4	16.7	$8^{-0.05}_{-0.4}$	7	5	3.2	6	11.5	9.5	M4x0.7	2	46	48	46	M12x1.25	6	M5x0.8	12	16	64	80	74	104	62
12	16	10	24	6	6	20	$12^{-0.05}_{-0.4}$	8	6	5	8	12.5	10.5	M6x1.0	3	50	52	50	M16x1.5	9	M5x0.8	17	22	75	96	89	128	72
16	16	10	24	6	6	20	$12^{-0.05}_{-0.4}$	8	6	5	8	12.5	10.5	M6x1.0	4	56	58	56	M16x1.5	9	M5x0.8	17	22	82	102	95	134	78
20	20	13	30	8	8	28	$16^{-0.05}_{-0.4}$	8	8	5	6	14.5	14.5	M8x1.25	9	62	62	62	M22x1.5	12	G1/8	20	24	95	110	106	150	86
25	22	17	30	8	10	33.5	$16^{-0.05}_{-0.4}$	8	8	5	6	15	15	M10x1.25	11	65	65	65	M22x1.5	12	G1/8	22	28	104	121	115	165	93

ISO6432标准气缸(内置磁环)
ISO6432 Standard Air Cylinder (Built-in Magnet)
Series KC85

外形尺寸图 Dimensions (mm)

KC85SB-S

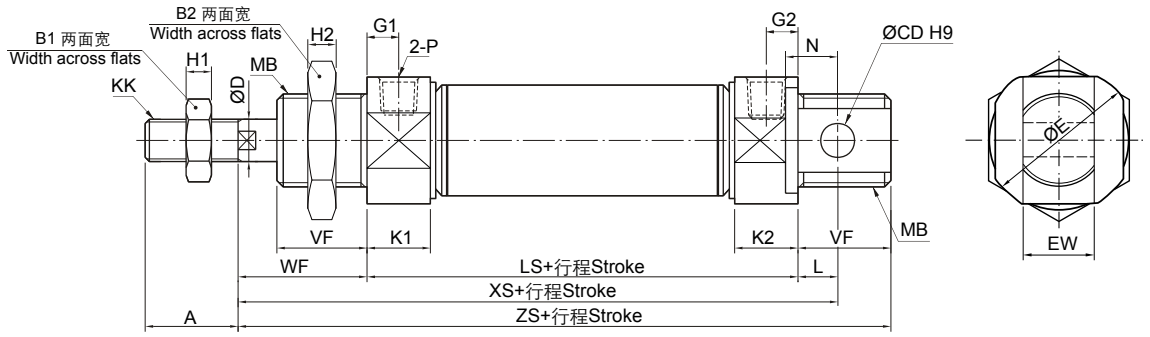

KC85SB-T

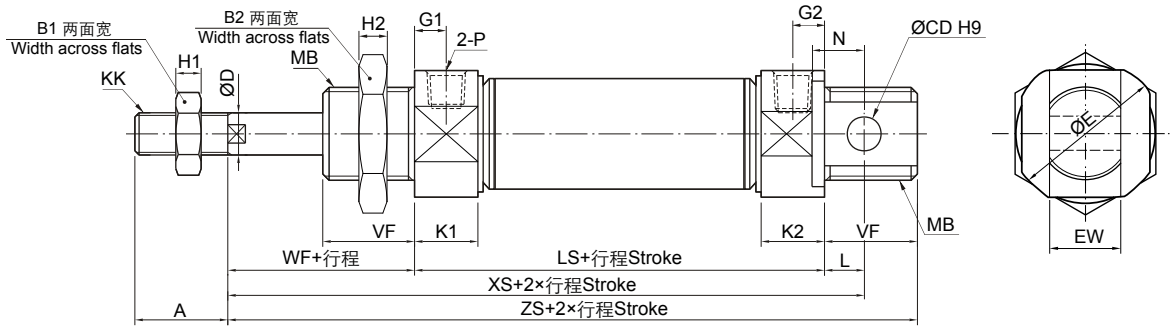

缸径 Bore size	A	B1	B2	CD	D	E	EW	G1	G2	H1	H2	K1	K2	KK	L	MB	N	P	VF	WF	1~50			51~100			101~150		
																					LS	XS	ZS	LS	XS	ZS	LS	XS	ZS
16	16	10	24	6	6	20	$12^{-0.05}_{-0.4}$	8	6	5	8	12.5	10.5	M6x1.0	4	M16x1.5	9	M5x0.8	17	22	81	107	120	106	132	145	-	-	-
20	20	13	30	8	8	28	$16^{-0.05}_{-0.4}$	8	8	5	6	14.5	14.5	M8x1.25	9	M22x1.5	12	G1/8	20	24	87	120	131	112	145	156	137	170	181
25	22	17	30	8	10	33.5	$16^{-0.05}_{-0.4}$	8	8	5	6	15	15	M10x1.25	11	M22x1.5	12	G1/8	22	28	90	129	140	115	154	165	140	179	190

KC85SL

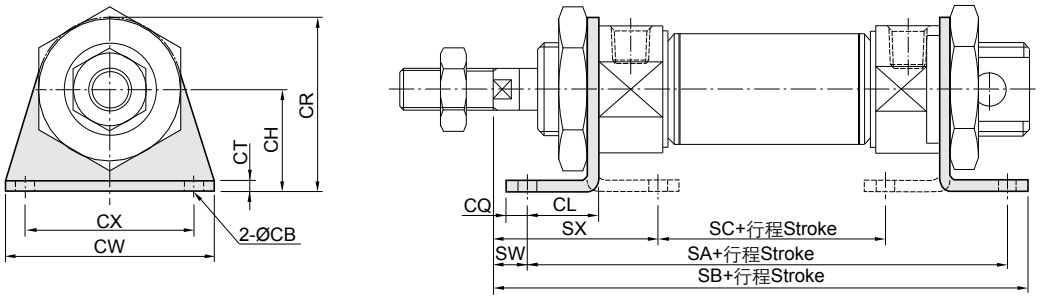

零件号 Part No.	缸径 Bore size	CB	CH	CL	CQ	CR	CT	CW	CX	SA	SB	SC	SW	SX
FC85-L10	8, 10	4.5	16	11	5	26	3	35	25	68	78	30	5	24
FC85-L12	12	5.5	20	14	6	33	4	42	32	78	92	30	8	32
FC85-L16	16	5.5	20	14	6	33	4	42	32	84	98	36	8	32
FC85-L25	20	6.6	25	17	8	42	5	54	40	96	111	38	7	36
FC85-L25	25	6.6	25	17	8	42	5	54	40	99	118	41	11	40

* 未标注尺寸与基本型相同。The unmentioned dimensions are same as the Basic type.

ISO6432标准气缸(内置磁环)
ISO6432 Standard Air Cylinder (Built-in Magnet)
Series KC85

外形尺寸图 Dimensions (mm)

KC85SF

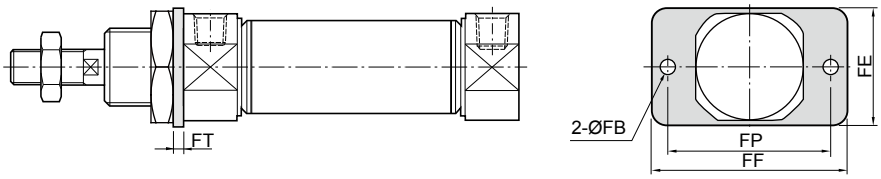

零件号 Part No.	缸径 Bore size	FB	FE	FF	FP	FT
FC85-F10	8, 10	4.5	22	40	30	3
FC85-F16	12, 16	5.5	30	52	40	4
FC85-F25	20, 25	6.6	40	66	50	5

* 未标注尺寸与基本型相同。The unmentioned dimensions are same as the Basic type.

KC85SG

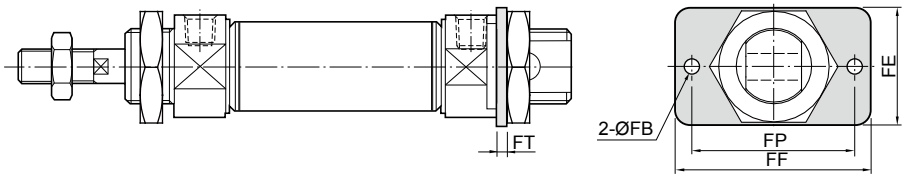

KC85SC

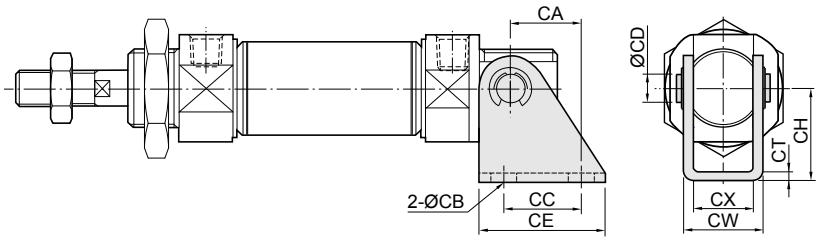

零件号 Part No.	缸径 Bore size	CA	CB	CC	CD	CE	CH	CT	CW	CX
FC85-C10	8, 10	11	4.5	12.5	4	20	24	2.5	13.1	8.1
FC85-C16	12, 16	13	5.5	15	6	25	27	3	18.1	12.1
FC85-C25	20, 25	16	6.6	20	8	32	30	4	24.1	16.1

* 未标注尺寸与基本型相同。
The unmentioned dimensions are same as the Basic type.

附件 Accessories

I型单肘节接头 I type single kunckle joint

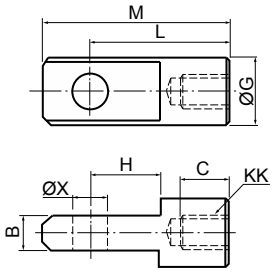

零件号 Part No.	缸径 Bore size	B	C	G	H	KK	L	M	X
FC85-I16	16	$6^{-0.2}_{-0.3}$	8	12	10	M6x1.0	21	31	$6^{+0.03}_{0}$
FC85-I20	20	$8^{-0.1}_{-0.2}$	14	16	12	M8x1.25	32	42	$8^{+0.036}_{0}$
FC85-I25	25	$10^{-0.1}_{-0.2}$	17	20	15	M10x1.25	40	52	$10^{+0.036}_{0}$

Y型双肘节接头 Y type double kunckle joint

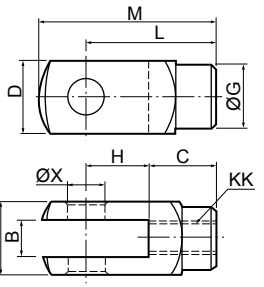

零件号 Part No.	缸径 Bore size	B	C	CH	D	G	H	KK	L	M	X
FC85-Y16	16	$6^{+0.4}_{+0.1}$	12	12	12	12	12	M6x1.0	24	31	$6^{+0.03}_{0}$
FC85-Y20	20	$8^{+0.5}_{+0.15}$	16	16	16	14	16	M8x1.25	32	42	$8^{+0.036}_{0}$
FC85-Y25	25	$10^{+0.5}_{+0.15}$	20	19	19	18	20	M10x1.25	40	52	$10^{+0.036}_{0}$

销子 Pin

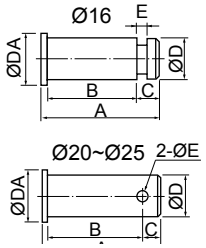

适用Y型双肘节接头 Applicable for Y type double knuckle joint

零件号 Part No.	缸径 Bore size	A	B	C	D	DA	E	扣环 / 开口销 Snap ring/ Cotter pin
FKJ6D	16	18.5	15	2	$6^{-0.03}_{-0.06}$	10	0.7	E4 扣环 Snap ring
FKJ8D	20	24.5	20.5	2.5	$8^{-0.04}_{-0.08}$	12	2.5	2.5*16 开口销 Cotter pin
FKJ10D	25	30	25	3.5	$10^{-0.04}_{-0.08}$	14	3.2	3.2*20 开口销 Cotter pin

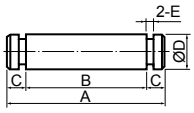

适用U型钩座 Applicable for clevis bracket

零件号 Part No.	缸径 Bore size	A	B	C	D	E	扣环 Snap ring
FC8DP-10A	8, 10	18	14	2	$4^{-0.03}_{-0.06}$	0.7	E3.2
FC8DP-16A	12, 16	23.5	19.5	2	$6^{-0.03}_{-0.06}$	0.7	E5
FC8DP-25A	20, 25	30	25	2.5	$8^{-0.04}_{-0.08}$	0.9	E7

ARK

不锈钢气缸(内置磁环)
Stainless Steel Air Cylinder (Built-in Magnet)
Series MA (Ø16~Ø63)

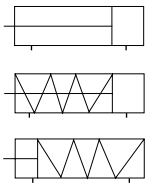

规格 Specifications

缸径 Bore size (mm)		16	20	25	32	40	50	63
接管口径 Port size		M5x0.8	Rc(PT) 1/8				Rc(PT) 1/4	
使用流体 Fluid		过滤压缩空气 Filtered compressed air						
动作形式和缓冲 Action and cushion	MSA, MTA	单动 , 橡胶缓冲 Single acting, rubber bumper					-	
	MA, MAD, MAJ	双动 , 橡胶缓冲 Double acting, rubber bumper					-	
	MAC, MACD, MACJ	-	双动 , 可调缓冲 Double acting, adjustable cushion					
	MAR	-	双动 Double acting					
保证耐压力 Proof pressure (MPa)		1.5						
使用压力范围 Operating pressure range (MPa)	双动 Double acting	0.15~1.0						
	单动 Single acting	0.2~1.0						
环境及流体温度 Ambient and fluid temperature		-5~60℃ (未冻结 No freezing)						
活塞速度 Piston speed	双动 Double acting	30~800 mm/s						
	单动 Single acting	50~800 mm/s						
行程公差 Stroke tolerance (mm)		0~150: $^{+1.0}_{0}$ >150: $^{+1.4}_{0}$						
* 润滑 Lubrication		不需要 Not required						

* 如需要润滑请使用透平 1 号油 ISOVG32。Please use Turbine oil 1st Grade ISOVG32 if necessary.

行程 / 磁性开关 Stroke/ Auto switch

缸径 Bore size (mm)	系列 Series		标准行程 Standard stroke (mm)	最大行程 Max. stroke (mm)	容许行程 Permissible stroke (mm)	系列 Series	标准行程 Standard stroke (mm)	磁性开关 / 固定钢带 Auto switch / Mounting band
16	MA	-	25, 50, 75, 80, 100, 125, 150, 160, 175, 200, 250, 300, 350, 400, 450, 500	500	600	MSA	25, 50, 75, 100	D-M9BK / PBC-S
20, 25, 32, 40		MAC MAR			800		25, 50, 75, 100, 125, 150	
50, 63	-					-	-	
16	MAD MAJ	-	25, 50, 75, 80, 100, 125, 150, 160, 175, 200, 250, 300	300	-	MTA	25, 50, 75, 100	
20, 25		MACD MACJ						
32, 40			25, 50, 75, 80, 100, 125, 150, 160, 175, 200, 250, 300, 350, 400, 450, 500	500				
50, 63	-					-	-	

* 非标行程可定制。Nonstandard stroke can be customized.

型号表示方法 How to Order

MA U 20 - 50 - 20 S CM

型号 Model

MA	双动 Double acting
MSA	单动 (弹簧压回) Single acting (Spring return)
MTA	单动 (弹簧压出) Single acting (Spring extend)
MAD	双活塞杆 Double rod
MAJ	双活塞杆可调行程 Double rod with adjustable stroke
MAR	直接安装 Direct mounting
MAC	可调缓冲 Adjustable cushion
MACD	双活塞杆可调缓冲 Double rod with adjustable cushion
MACJ	双活塞杆可调行程可调缓冲 Double rod with adjustable stroke and cushion

前盖型式 Front cover type (MAR)

F	前面固定 Front mounting
U	底部固定 Bottom mounting

缸径 Bore size (mm)

行程 Stroke (mm)

可调行程 Adjustable stroke (MAJ, MACJ)

10	10 mm
20	20 mm
30	30 mm
40	40 mm
50	50 mm
75	75 mm
100	100 mm

磁环 Magnet

S	内置磁环 Built-in magnet

后盖型式 End cover type (MA, MAC, MSA, MTA)

CA	原装 U 型钩 Integrated clevis
U	平尾 End plain
CM	圆尾 End round

安装形式 Mounting

-	基本型 Basic	
LB	脚座 Foot	MA, MAC, MSA, MTA, MAD, MACD, MAJ, MACJ
FA	前法兰 Front flange	
SDB	尾部 U 型钩支架 Bracket for integrated clevis	MA, MAC, MSA, MTA

3

不锈钢气缸(内置磁环)
Stainless Steel Air Cylinder (Built-in Magnet)
Series MA

外形尺寸图 Dimensions (mm)

MA (Ø16~Ø40)

MAC (Ø20~Ø40)

-CA

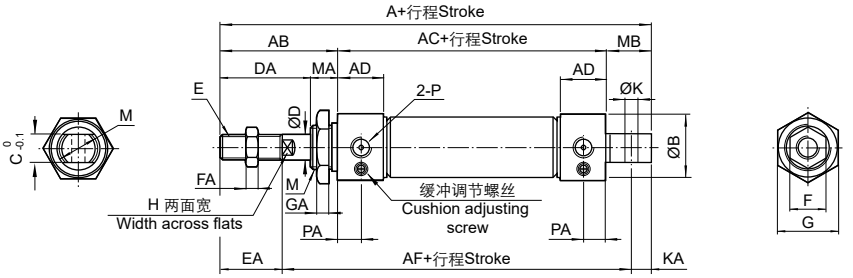

-CM

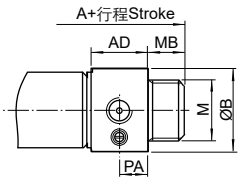

-U

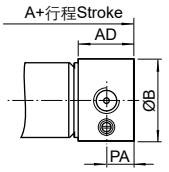

系列 Series	缸径 Bore size	A			AB	AC	AD	AF	B	C	D	DA	E	EA	F	FA	G	GA	H	K	KA	M	MA	MB		P	PA
		CA	CM	U																				CA	CM		
MA	16	114	114	98	38	60	10	91	21	12	6	22	M6x1.0	16	10	5	22	6	5	6	9	M16x1.5	16	16	16	M5x0.8	5
MA MAC	20	137	128	116	40	76	16	108	27	16	8	28	M8x1.25	20	12	6	29	7	6	8	12	M22x1.5	12	21	12	1/8	8
	25	141	134	120	44	76	16	110	30	16	10	30	M10x1.25	22	17	6	29	7	8	8	12	M22x1.5	14	21	14	1/8	8
	32	147	134	120	44	76	16	113	35	16	12	30	M10x1.25	22	17	6	32	8	10	10	15	M24x2.0	14	27	14	1/8	8
	40	149	136	122	46	76	16.5	113	41.5	20	16	32	M12x1.25	24	17	7	41	9	14	12	15	M30x2.0	14	27	14	1/8	8

MAC (Ø50, Ø63)

-CA

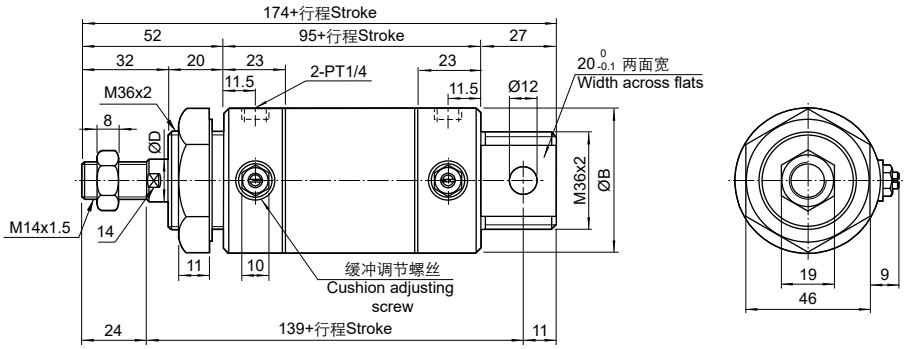

-CM

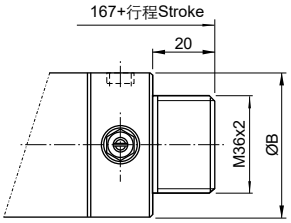

-U

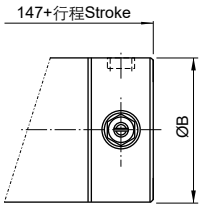

系列 Series	缸径 Bore size	B	D
MAC	50	53	16
	63	67	16

3

不锈钢气缸(内置磁环)
Stainless Steel Air Cylinder (Built-in Magnet)
Series MA

外形尺寸图 Dimensions (mm)

MSA (Ø16~Ø40)

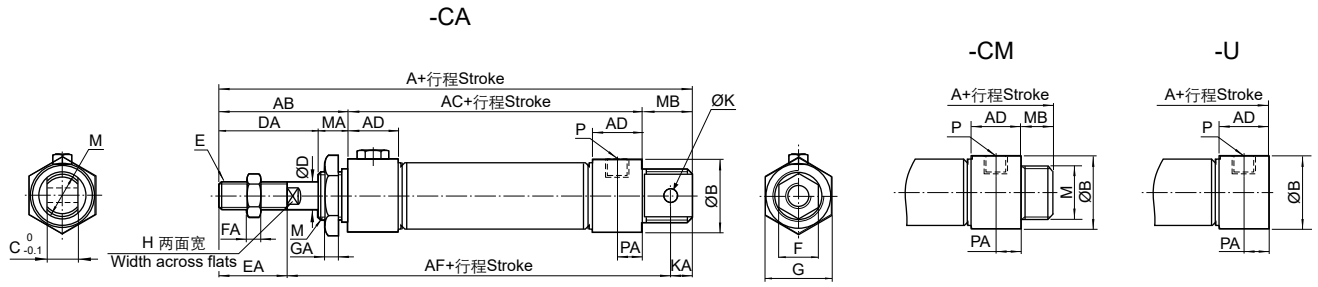

MTA (Ø16~Ø40)

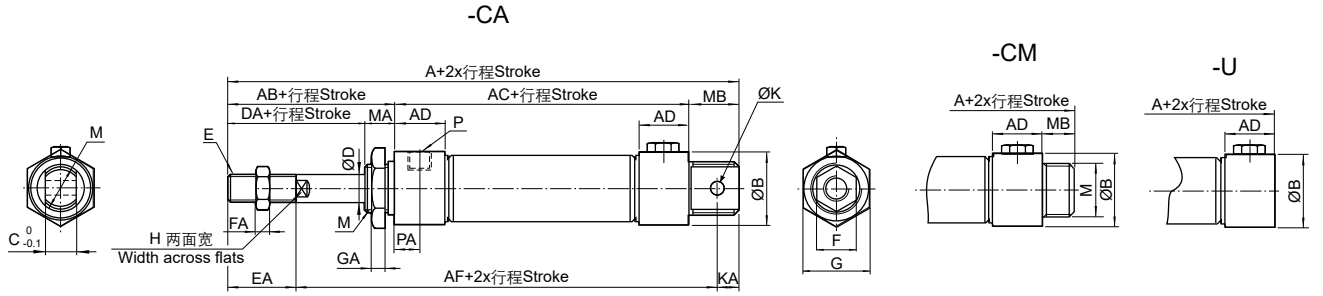

系列 Series	缸径 Bore size	ST ≤ 50					ST=51~100					ST=101~150				
		A			AC	AF	A			AC	AF	A			AC	AF
		CA	CM	U			CA	CM	U			CA	CM	U		
MSA	16	139	139	123	85	116	164	164	148	110	141	-	-	-	-	-
	20	162	153	141	101	133	187	178	166	126	158	212	203	191	151	183
	25	166	159	145	101	135	191	184	170	126	160	216	209	195	151	185
	32	172	159	145	101	138	197	184	170	126	163	222	209	195	151	188
	40	174	161	147	101	138	199	186	172	126	163	224	211	197	151	188

系列 Series	缸径 Bore size	ST ≤ 25					ST=26~50					ST=51~75					ST=76~100				
		A			AC	AF	A			AC	AF	A			AC	AF	A			AC	AF
		CA	CM	U			CA	CM	U			CA	CM	U			CA	CM	U		
MTA	16	129	129	113	75	106	139	139	123	85	116	154	154	138	100	131	164	164	148	110	141
	20	152	143	131	91	123	162	153	141	101	133	177	168	156	116	148	187	178	166	126	158
	25	156	149	135	91	125	166	159	145	101	135	181	174	160	116	150	191	184	170	126	160
	32	162	149	135	91	128	172	159	145	101	138	192	179	165	121	158	192	179	165	121	168
	40	164	151	137	91	128	174	161	147	101	138	194	181	167	121	158	204	191	177	131	168

系列 Series	缸径 Bore size	AB	AD	B	C	D	DA	E	EA	F	FA	G	GA	H	K	KA	M	MA	MB		P	PA
																			CA	CM		
MSA MTA	16	38	10	21	12	6	22	M6x1.0	16	10	5	22	6	5	6	7	M16x1.5	16	16	16	M5x0.8	5
	20	40	16	27	16	8	28	M8x1.25	20	12	6	29	7	6	8	9	M22x1.5	12	21	12	1/8	8
	25	44	16	30	16	10	30	M10x1.25	22	17	6	29	7	8	8	9	M22x1.5	14	21	14	1/8	8
	32	44	16	35	16	12	30	M10x1.25	22	17	6	32	8	10	10	12	M24x2.0	14	27	14	1/8	8
	40	46	16.5	41.5	20	16	32	M12x1.25	24	17	7	41	9	14	12	12	M30x2.0	14	27	14	1/8	8

不锈钢气缸(内置磁环)
Stainless Steel Air Cylinder (Built-in Magnet)
Series MA

外形尺寸图 Dimensions (mm)

MAD (Ø16~Ø40), MACD (Ø20~Ø40)

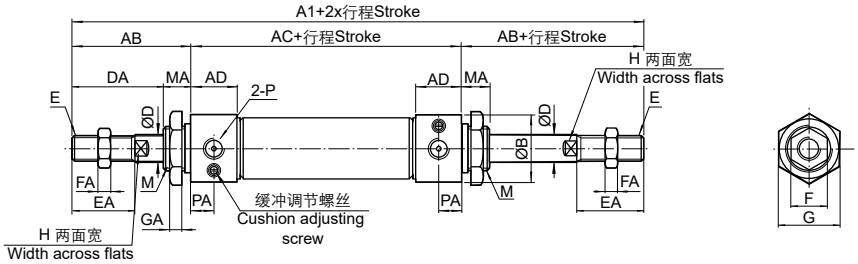

MACD (Ø50, Ø63)

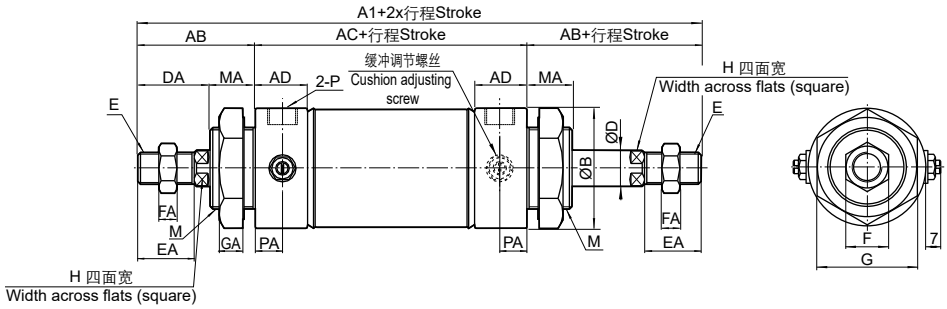

MAJ (Ø16~Ø40), MACJ (Ø20~Ø40)

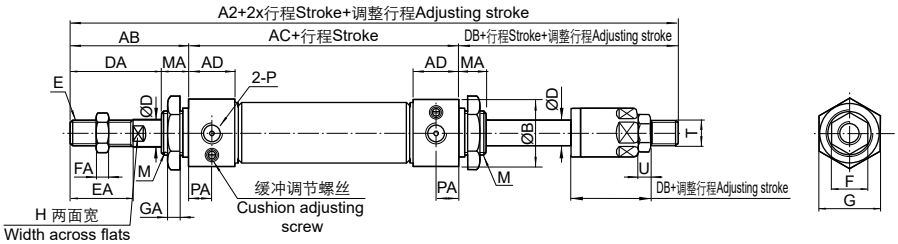

MACJ (Ø50, Ø63)

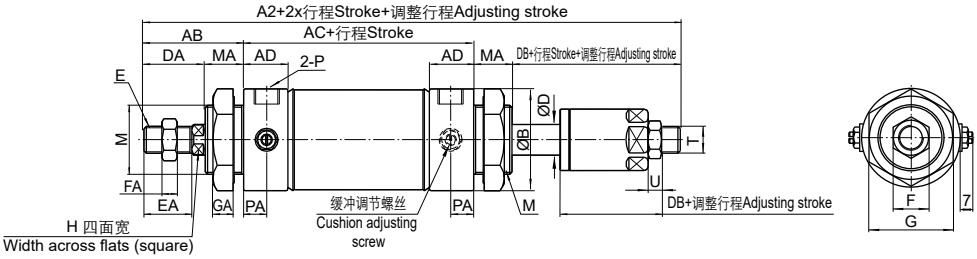

系列 Series	缸径 Bore size	A1	A2	AB	AC	AD	B	D	DA	DB	E	EA	F	FA	G	GA	H	M	MA	P	PA	T	U
MAD, MAJ	16	136	135	38	60	10	21	6	22	21	M6x1.0	16	10	5	22	6	5	M16x1.5	16	M5x0.8	5	M6x1.0	5
MAD, MAJ MACD, MACJ	20	156	153	40	76	16	27	8	28	25	M8x1.25	20	12	6	29	7	6	M22x1.5	12	1/8	8	M8x1.25	6
	25	164	161	44	76	16	30	10	30	27	M10x1.25	22	17	6	29	7	8	M22x1.5	14	1/8	8	M10x1.25	6
	32	164	161	44	76	16	35	12	30	27	M10x1.25	22	17	6	32	8	10	M24x2.0	14	1/8	8	M10x1.25	6
	40	168	164	46	76	16.5	41.5	16	32	28	M12x1.25	24	17	7	41	9	14	M30x2.0	14	1/8	8	M12x1.25	7
MACD, MACJ	50	199	195	52	95	23	53	16	32	28	M14x1.5	24	19	8	46	11	14	M36x2.0	20	1/4	11.5	M12x1.25	7
	63	199	195	52	95	23	67	16	32	28	M14x1.5	24	19	8	46	11	14	M36x2.0	20	1/4	11.5	M12x1.25	7

不锈钢气缸(内置磁环)
Stainless Steel Air Cylinder (Built-in Magnet)
Series MA

外形尺寸图 Dimensions (mm)

MARU (Ø20~Ø40)

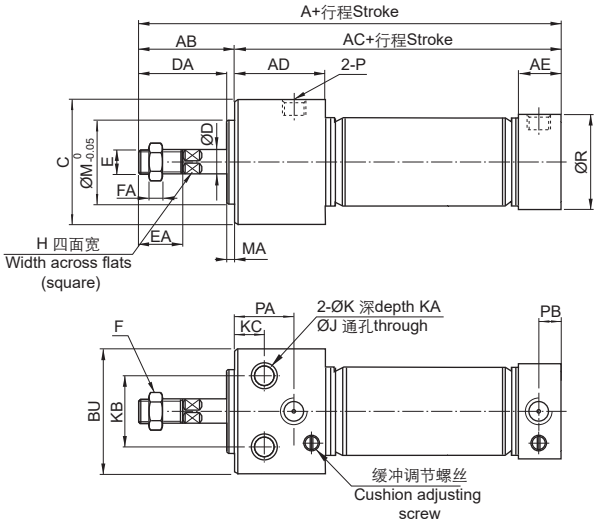

MARF (Ø20~Ø40)

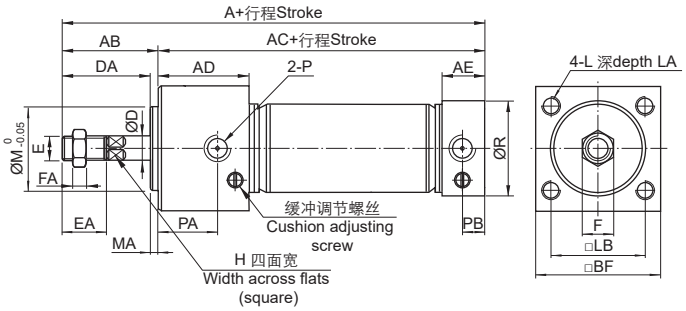

MARF (Ø50, Ø63)

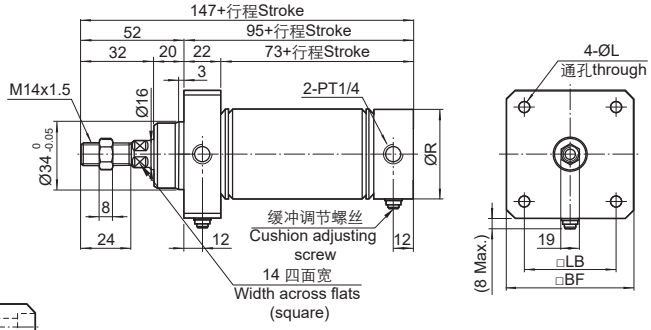

MARU (Ø50, Ø63)

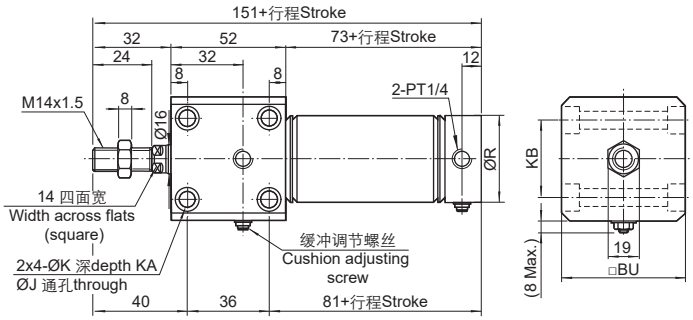

系列 Series	缸径 Bore size	BU	J	K	KA	KB	R
MARU	50	62	6.5	11	6.5	44	53
	63	74	9	14	8.5	48	67

系列 Series	缸径 Bore size	BF	L	LB	R
MARF	50	62	6.5	48	53
	63	74	9	58	67

系列 Series	缸径 Bore size	A	AB	AC	AD	AE	BF	BU	C	D	DA	E	EA	F	FA	H	J	K	KA	KB	KC	L	LA	LB	M	MA	P	PA	PB	R
MARU MARF	20	120	31	89	29	16	30.5	33.5	30.5	8	28	M8x1.25	20	13	5	6	5.5	9.5	6.5	21	12	M5x0.8	9	22	20	3	1/8	22	8	27
	25	122	33	89	29	16	36.5	39	36.5	10	30	M10x1.25	22	17	6	8	6.5	11	7.5	25	12	M6x1.0	11	26	26	3	1/8	22	8	30
	32	122	33	89	29	16	42.5	47	42.5	12	30	M10x1.25	22	17	6	10	9	14	10	30	12	M6x1.0	11	30	26	3	1/8	22	8	35
	40	132.5	35	97.5	37.5	16.5	52.5	58.5	52.5	16	32	M14x1.5	24	19	8	14	11	17.5	12.5	38	15	M8x1.25	14	36	32	3	1/8	27	8	41.5

3

不锈钢气缸(内置磁环)
Stainless Steel Air Cylinder (Built-in Magnet)
Series MA

外形尺寸图 Dimensions (mm)

脚座Foot LB

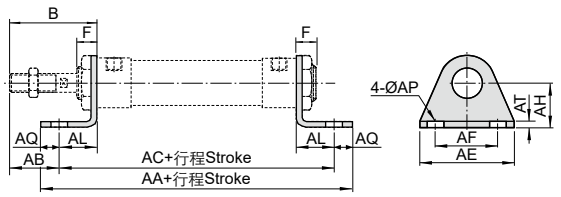

零件号 Part No.	缸径 Bore size	AA				AB	AC				AE	AF	AH	AL	AP	AQ	AT	B	F
		MA	MSA ST=0~50	MSA ST=51~100	MSA ST=101~150		MA	MSA ST=0~50	MSA ST=51~100	MSA ST=101~150									
F-MA16LB	16	98	123	148	-	25	86	111	136	-	44	32	20	13	5.5	6	3	38	16
F-MA20LB	20	122	147	172	197	25	106	131	156	181	54	40	25	15	6.5	8	3	40	12
F-MA20LB	25	122	147	172	197	29	106	131	156	181	54	40	25	15	6.5	8	3	44	14
F-MA32LB	32	142	167	192	217	19	126	151	176	201	59	45	32	25	6.5	8	4	44	14
F-MA40LB	40	142	167	192	217	21	126	151	176	201	64	50	36	25	6.5	8	4	46	14

前法兰Front flange FA

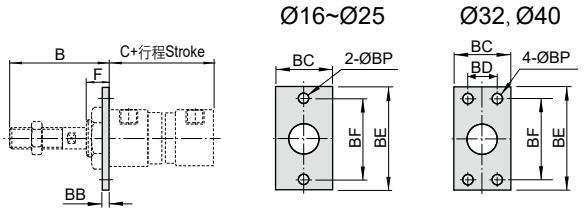

零件号 Part No.	缸径 Bore size	B	BB	BC	BD	BE	BF	BP	C				F
									MA	MSA ST=0~50	MSA ST=51~100	MSA ST=101~150	
F-MA16FA	16	38	3	26	-	52	40	5.5	60	85	110	-	16
F-MA20FA	20	40	4	38	-	64	50	6.5	76	101	126	151	12
F-MA20FA	25	44	4	38	-	64	50	6.5	76	101	126	151	14
F-MA32FA	32	44	4	47	33	72	58	6.5	76	101	126	151	14
F-MA40FA	40	46	4	50	36	84	70	6.5	76	101	126	151	14

尾部 U 型钩支架 Bracket for integrated clevis SDB

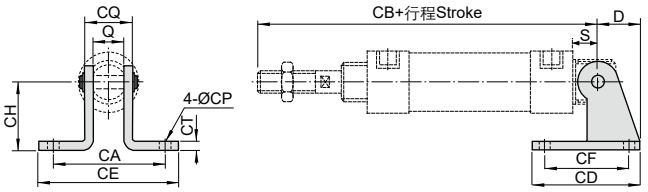

零件号 Part No.	缸径 Bore size	CA	CB				CD	CE	CF	CH	CP	CQ	CT	D	Q	S
			MA	MSA ST=0~50	MSA ST=51~100	MSA ST=101~150										
F-MA16SDB	16	-	107	132	157	-	23	-	12	20	5.5	16	2	16	12	9
F-MA20SDB	20	51	128	153	178	203	48	67	32	32	6.5	22	3	21	16	12
F-MA20SDB	25	51	132	157	182	207	48	67	32	32	6.5	22	3	21	16	12
F-MA32SDB	32	51	135	160	185	210	52	67	36	36	6.5	24	4	27	16	15
F-MA40SDB	40	55	137	162	187	212	56	71	40	40	6.5	28	4	27	20	15

I 型单肘节接头 I type single knuckle joint

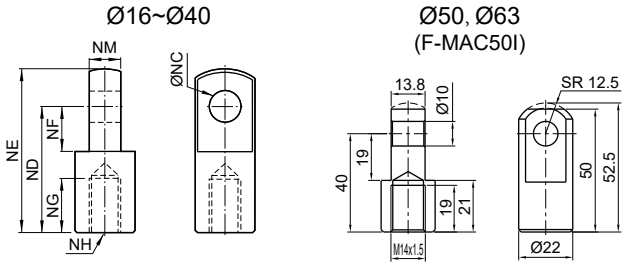

零件号 Part No.	缸径 Bore size	NC	ND	NE	NF	NG	NH	NM
F-MA16I	16	5	21	28	8.5	8	M6x1.0	6
F-MA20I	20	8	30	40	11	15	M8x1.25	8
F-MA25I	25, 32	10	40	50	15	20	M10x1.25	10
F-MA40I	40	10	45	57	16	23	M12x1.25	14

Y 型单肘节接头 Y type single knuckle joint

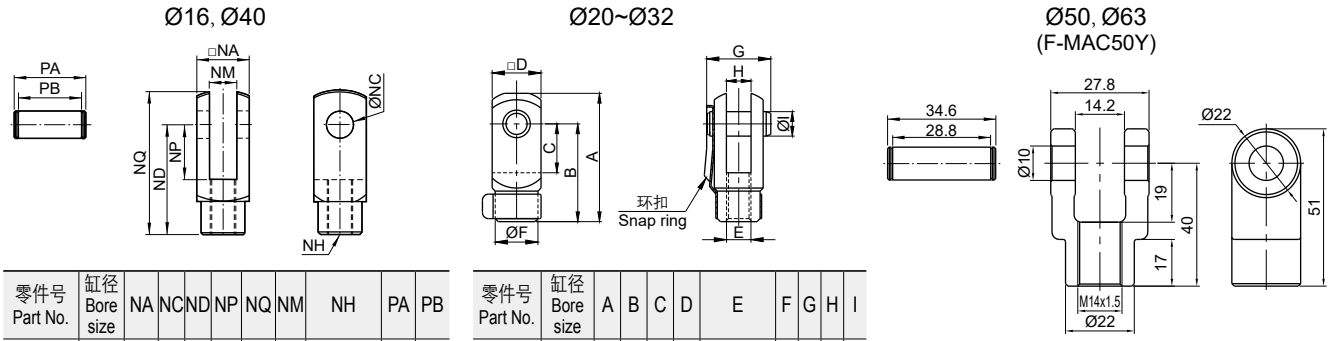

零件号 Part No.	缸径 Bore size	NA	NC	ND	NP	NQ	NM	NH	PA	PB
F-MA16Y	16	12	5	21	8.5	27.4	6	M6x1.0	16.8	12.4
F-MA40Y	40	25.4	10	45	20	57	14	M12x1.25	32	26.2

零件号 Part No.	缸径 Bore size	A	B	C	D	E	F	G	H	I
F-MA20Y	20	42	32	16	16	M8x1.25	14	21	8	8
F-MA25Y	25, 32	52	40	20	19	M10x1.25	18	25	10	10

ARK 铝合金气缸
Aluminium Air Cylinder
Series MAL (Ø20~Ø40)

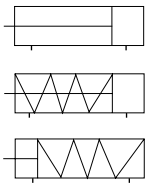

规格 Specifications

缸径 Bore size (mm)		20	25	32	40
接管口径 Port size		Rc(PT) 1/8			Rc(PT) 1/4
使用流体 Fluid		过滤压缩空气 Filtered compressed air			
动作形式 Action	MSAL, MTAL	单动 Single acting			
	MAL, MALD, MALJ	双动 Double acting			
保证耐压力 Proof pressure (MPa)		1.5			
使用压力范围 Operating pressure range (MPa)	双动 Double acting	0.15~1.0			
	单动 Single acting	0.2~1.0			
环境及流体温度 Ambient and fluid temperature		-5~60℃ (未冻结 No freezing)			
活塞速度 Piston speed	双动 Double acting	30~800 mm/s			
	单动 Single acting	50~800 mm/s			
行程公差 Stroke tolerance (mm)		0~150: $^{+1.0}_{0}$ >150: $^{+1.4}_{0}$			
* 润滑 Lubrication		不需要 Not required			
缓冲 Cushion		橡胶缓冲 Rubber bumper			

* 如需要润滑请使用透平 1 号油 ISOVG32。Please use Turbine oil 1st Grade ISOVG32 if necessary.

行程 / 磁性开关 Stroke/ Auto switch

缸径 Bore size (mm)	系列 Series	标准行程 Standard stroke (mm)	最大行程 Max. stroke (mm)	容许行程 Permissible stroke (mm)	系列 Series	标准行程 Standard stroke (mm)	磁性开关 / 固定钢带 Auto switch / Mounting band
20	MAL	25, 50, 75, 80, 100, 125, 150, 160, 175, 200, 250, 300, 350, 400, 450, 500	500	1000	MSAL	25, 50, 75, 100, 125, 150	D-M9BK / PBC-A
25							
32				1500			
40							
20	MALD MALJ	25, 50, 75, 80, 100, 125, 150, 160, 175, 200, 250, 300	300	-	MTAL	25, 50, 75, 100	
25							
32		25, 50, 75, 80, 100, 125, 150, 160, 175, 200, 250, 300, 350, 400, 450, 500	500				
40							

型号表示方法 How to Order

MAL 20 - 50 - 20 S CM [ ]

型号 Model

MAL	双动 Double acting
MSAL	单动 (弹簧压回) Single acting (Spring return)
MTAL	单动 (弹簧压出) Single acting (Spring extend)
MALD	双活塞杆 Double rod
MALJ	双活塞杆可调行程 Double rod with adjustable stroke

缸径 Bore size (mm)

行程 Stroke (mm)

可调行程 Adjustable stroke (MALJ)

10	10 mm
20	20 mm
30	30 mm
40	40 mm
50	50 mm
75	75 mm
100	100 mm

磁环 Magnet

-	无 None
S	内置磁环 Built-in magnet

后盖型式 End cover type (MAL, MSAL, MTAL)

CA	原装 U 型钩 Integrated clevis
U	平尾 End plain
CM	圆尾 End round

安装形式 Mounting

-	基本型 Basic	
LB	脚座 Foot	MAL, MSAL, MTAL, MALD, MALJ
FA	前法兰 Front flange	
SDB	尾部 U 型钩支架 Bracket for integrated clevis	MAL, MSAL, MTAL

* 安装附件与 MA 系列通用。
Mounting accessories are common with Series MA.

3

铝合金气缸
Aluminium Air Cylinder
Series MAL

外形尺寸图 Dimensions (mm)

MAL

-CA

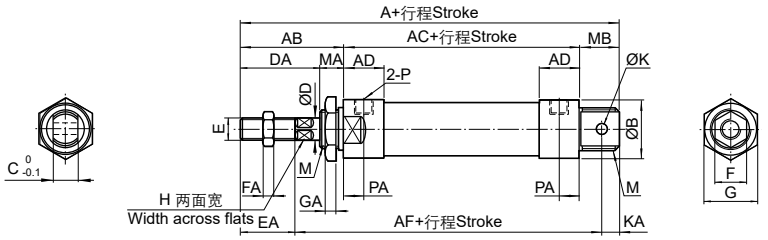

-CM

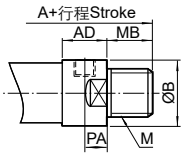

-U

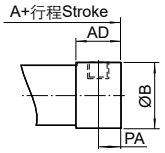

MALD

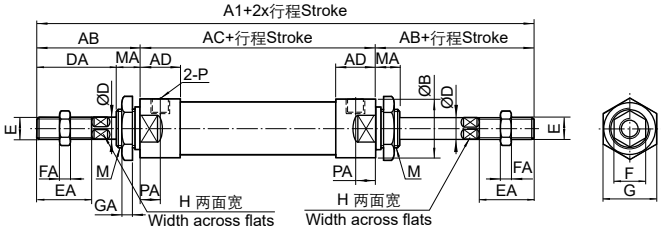

MALJ

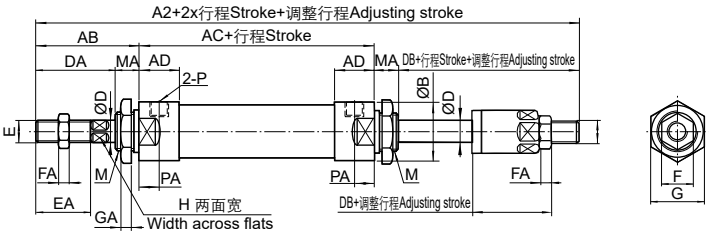

缸径 Bore size	A			A1	A2	AB	AC	AD	AF	B	C	D	DA	DB	E	EA	F	FA	G	GA	H	K	KA	M	MA	MB		P	PA
	CA	CM	U																							CA	CM		
20	131	122	110	150	147	40	70	16	102	29	16	8	28	25	M8x1.25	20	12	6	29	7	6	8	9	M22x1.5	12	21	12	1/8	8
25	135	128	114	158	155	44	70	16	104	34	16	10	30	27	M10x1.25	22	17	6	29	7	8	8	9	M22x1.5	14	21	14	1/8	8
32	141	128	114	158	155	44	70	16	107	39.5	16	12	30	27	M10x1.25	22	17	6	32	8	10	10	12	M24x2.0	14	27	14	1/8	8
40	165	152	138	184	180	46	92	22	129	49.5	20	16	32	28	M12x1.25	24	17	7	41	9	14	12	12	M30x2.0	14	27	14	1/4	11

铝合金气缸
Aluminium Air Cylinder
Series MAL

外形尺寸图 Dimensions (mm)

MSAL

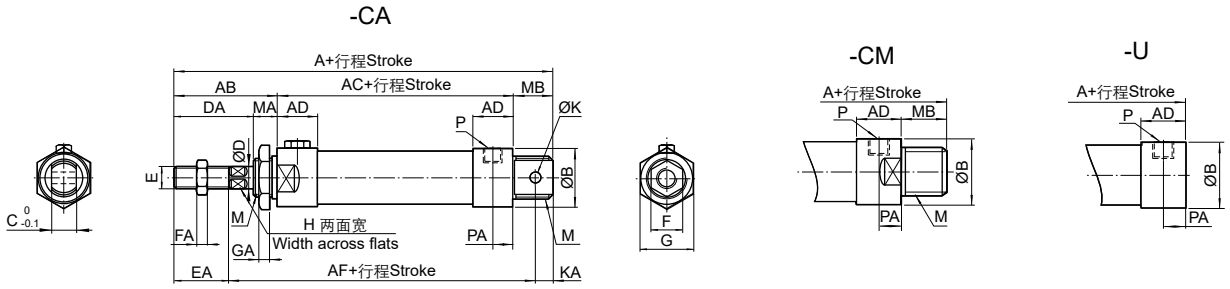

MTAL

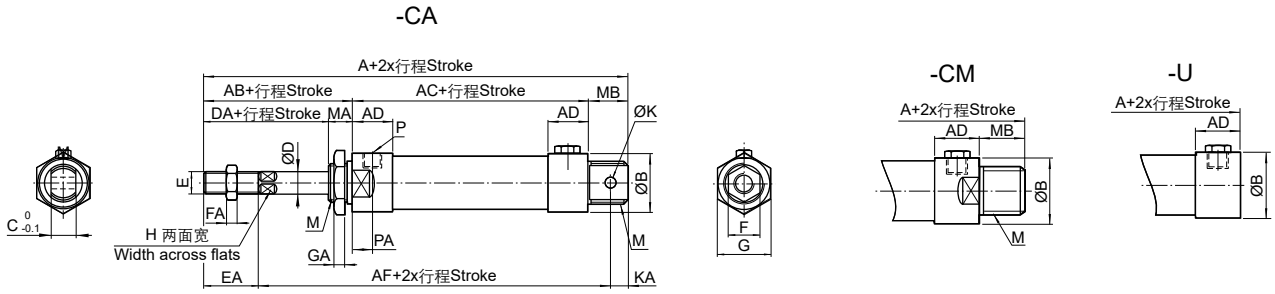

系列 Series	缸径 Bore size	ST ≤ 50					ST=51~100					ST=101~150				
		A			AC	AF	A			AC	AF	A			AC	AF
		CA	CM	U			CA	CM	U			CA	CM	U		
MSAL	20	156	147	135	95	127	181	172	160	120	152	206	197	185	145	177
	25	160	153	139	95	129	185	178	164	120	154	210	203	189	145	179
	32	166	153	139	95	132	191	178	164	120	157	216	203	189	145	182
	40	190	177	163	117	154	215	202	188	142	179	240	227	213	167	204

系列 Series	缸径 Bore size	ST ≤ 25					ST=26~50					ST=51~75					ST=76~100				
		A			AC	AF	A			AC	AF	A			AC	AF	A			AC	AF
		CA	CM	U			CA	CM	U			CA	CM	U			CA	CM	U		
MTAL	20	146	137	125	85	117	156	147	135	95	127	171	162	150	110	142	181	172	160	120	152
	25	150	143	129	85	121	160	153	139	95	131	175	168	154	110	146	185	178	164	120	156
	32	156	143	129	85	122	166	153	139	95	132	186	173	159	115	152	196	183	169	125	162
	40	180	167	153	107	144	190	177	163	117	154	210	197	183	137	174	220	207	193	147	184

缸径 Bore size	AB	AD	B	C	D	DA	E	EA	F	FA	G	GA	H	K	KA	M	MA	MB		P	PA
																		CA	CM		
20	40	16	29	16	8	28	M8x1.25	20	12	6	29	7	6	8	9	M22x1.5	12	21	12	1/8	8
25	44	16	34	16	10	30	M10x1.25	22	17	6	29	7	8	8	9	M22x1.5	14	21	14	1/8	8
32	44	16	39.5	16	12	30	M10x1.25	22	17	6	32	8	10	10	12	M24x2.0	14	27	14	1/8	8
40	46	22	49.5	20	16	32	M12x1.25	24	17	7	41	9	14	12	12	M30x2.0	14	27	14	1/4	11

ARK 轻巧型气缸
Light Air Cylinder
Series KCG1 (Ø20~Ø63)

规格 Specifications

缸径 Bore size (mm)	20	25	32	40	50	63
接管口径 Port size Rc(PT)	1/8				1/4	
使用流体 Fluid	过滤压缩空气 Filtered compressed air					
动作形式 Action	双动 Double acting					
保证耐压力 Proof pressure (MPa)	1.5					
使用压力范围 Operating pressure range (MPa)	0.05~1.0					
环境及流体温度 Ambient and fluid temperature	-5~60℃ (未冻结 No freezing)					
活塞速度 Piston speed	50~500 mm/s					
缓冲 Cushion	橡胶缓冲 (标准) Rubber bumper (Standard) 气缓冲 (可选) Air cushion (Option)					
行程公差 Stroke tolerance (mm)	~1000: $^{+1.4}_{0}$					
* 润滑 Lubrication	不需要 Not required					

* 如需要润滑请使用透平 1 号油 ISOVG32。Please use Turbine oil 1st Grade ISOVG32 if necessary.

行程 / 磁性开关 Stroke/ Auto switch

缸径 Bore size (mm)	标准行程 Standard stroke (mm)	磁性开关 / 固定钢带 Auto switch/ Band mounting
20	25, 50, 75, 100, 125, 150, 200	D-M9BK/PBC-A
25, 32, 40, 50, 63	25, 50, 75, 100, 125, 150, 200, 250, 300	

* 非标行程可定制。Nonstandard stroke can be customized.

型号表示方法 How to Order

KC [D] G1 [B] [20] - [50] [A] [Y]

磁环 Magnet

-	无 None
D	内置磁环 Built-in magnet

安装形式 Mounting

B	基本型 Basic
L	脚座 Foot
F	前法兰 Front flange
G	后法兰 Rear flange
*D	双 U 型钩 Double clevis
*U	前轴耳 Front trunnion
*T	后轴耳 Rear trunnion

* 双 U 型钩和轴耳可选配相同的接座。
The pivot bracket is optional to applied to both double clevis and trunnion.

缸径 Bore size (mm)

行程 Stroke (mm)

缓冲 Cushion

A	气缓冲 Air cushion

附件 Accessory

-	无 None
I	I 型单肘节接头 I type single knuckle joint
Y	Y 型双肘节接头 Y type double knuckle joint

轻巧型气缸
Light Air Cylinder
Series KCG1

外形尺寸图 Dimensions (mm)

KC(D)G1B

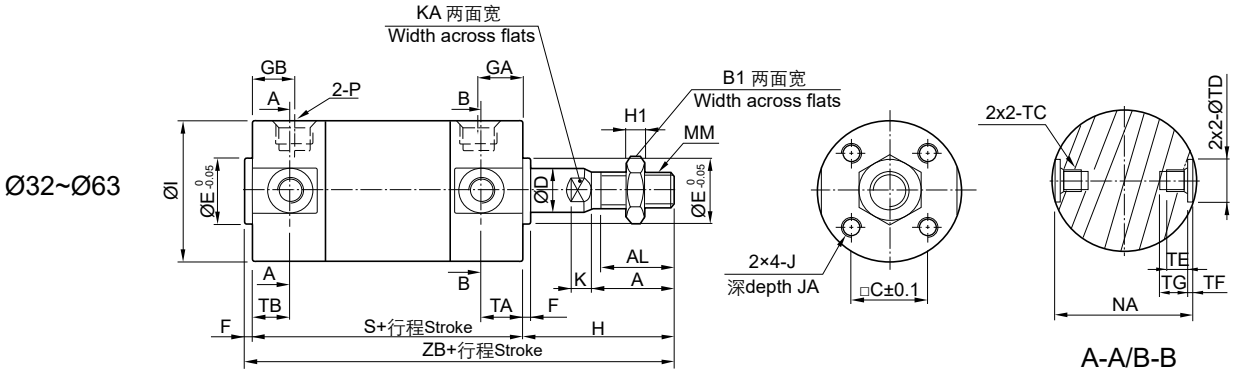

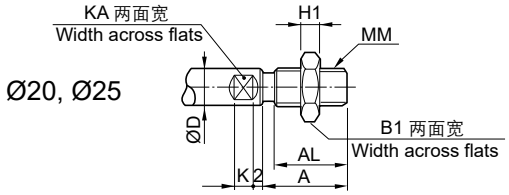

缸径 Bore size	A	AL	B1	C	D	E	F	GA	GB	H	H1	I	J	JA	K	KA	MM	NA	P	S	TA	TB	TC	TD	TE	TF	TG	ZB
20	18	15.5	13	14	8	12	2	12	12	35	5	26	M4x0.7	7	4	6	M8x1.25	24	1/8	69	11	11	M5x0.8	$8^{+0.08}_{0}$	4	0.5	5.5	106
25	22	19.5	17	16.5	10	14	2	12	12	40	6	31	M5x0.8	7.5	5	8	M10x1.25	29	1/8	69	11	11	M6x0.75	$10^{+0.08}_{0}$	5	1	6.5	111
32	22	19.5	17	20	12	18	2	12	11	40	6	38	M5x0.8	8	5.5	10	M10x1.25	36	1/8	71	11	10	M8x1.0	$12^{+0.08}_{0}$	5.5	1.25	7.5	113
40	30	27	22	26	16	25	2	13	12	50	8	47	M6x1.0	12	6	14	M14x1.5	44	1/8	78	12	10	M10x1.25	$14^{+0.08}_{0}$	6	1.25	8.5	130
50	35	32	27	32	20	30	2	14	13	58	11	58	M8x1.25	16	7	18	M18x1.5	55	1/4	90	13	12	M12x1.25	$16^{+0.08}_{0}$	7.5	2	10	150
63	35	32	27	38	20	32	2	14	13	58	11	72	M10x1.5	16	7	18	M18x1.5	69	1/4	90	13	12	M14x1.5	$18^{+0.08}_{0}$	11.5	3	14.5	150

KC(D)G1L

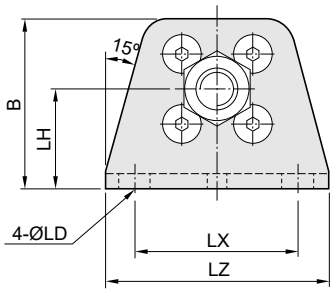

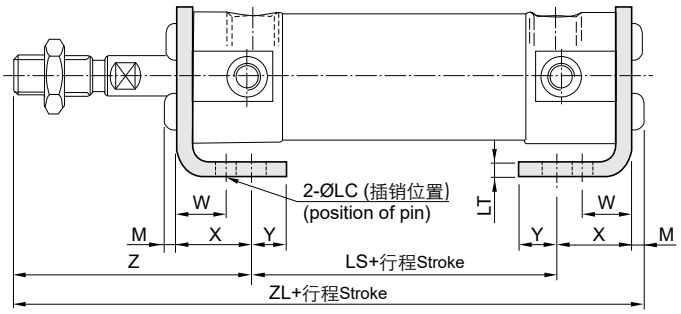

零件号 Part No.	缸径 Bore size	B	LC	LD	LH	LS	LT	LX	LZ	M	W	X	Y	Z	ZL
FCG-L020	20	34	4	6	20	45	3	32	44	2.2	10	15	7	47	109.2
FCG-L025	25	38.5	4	6	22	45	3	36	49	2.8	10	15	7	52	114.8
FCG-L032	32	45	4	6.6	25	45	3	44	58	2.8	10	16	8	53	116.8
FCG-L040	40	54.5	4	6.6	30	51	3	54	71	3.3	10	16.5	8.5	63.5	134.3
FCG-L050	50	70.5	5	9	40	55	4.5	66	86	4.4	17.5	22	11	75.5	156.9
FCG-L063	63	82.5	5	11	45	55	4.5	82	106	5.5	17.5	22	13	75.5	158

* 未标注尺寸与基本型相同。The unmentioned dimensions are same as the Basic type.

轻巧型气缸
Light Air Cylinder
Series KCG1

外形尺寸图 Dimensions (mm)

KC(D)G1F

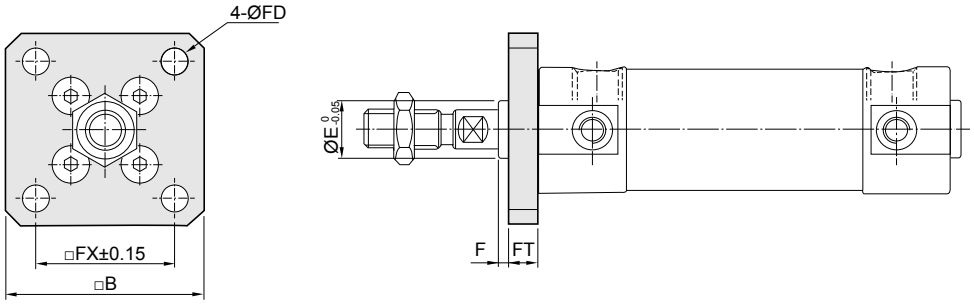

KC(D)G1G

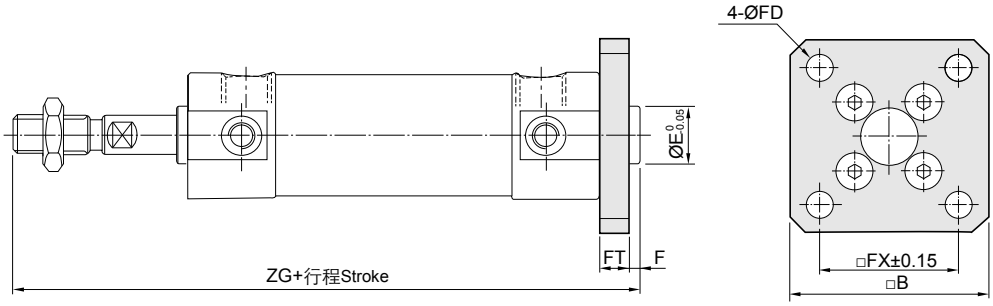

零件号 Part No.	缸径 Bore size	B	E	F	FD	FT	FX	ZG
FCG-F020	20	40	12	2	5.5	6	28	112
FCG-F025	25	44	14	2	5.5	7	32	118
FCG-F032	32	53	18	2	6.6	7	38	120
FCG-F040	40	61	25	2	6.6	8	46	138
FCG-F050	50	76	30	2	9	9	58	159
FCG-F063	63	92	32	2	11	9	70	159

* 未标注尺寸与基本型相同。
The unmentioned dimensions are same as the Basic type.

3

KC(D)G1D

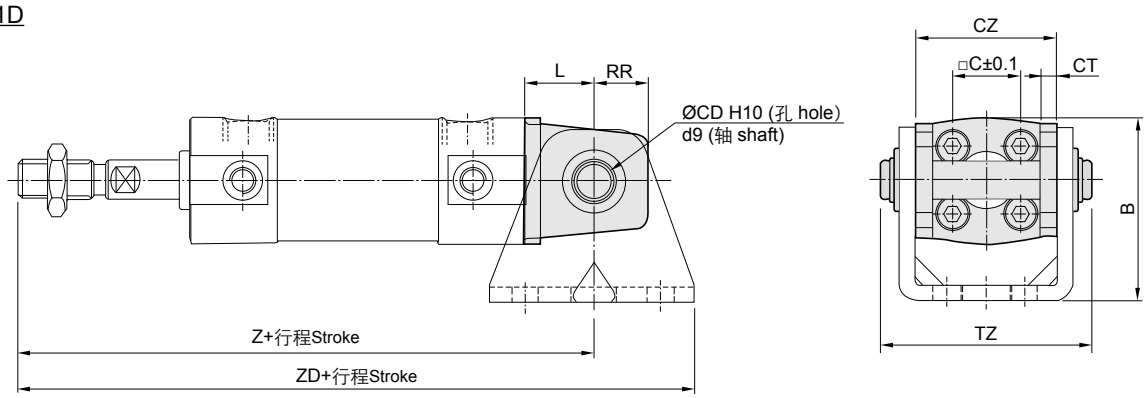

零件号 Part No.	缸径 Bore size	B	C	CD	CT	CZ	L	RR	TZ	Z	ZD
FCG-D020	20	38	14	8	3.2	29	14	11	43.4	118	139
FCG-D025	25	45.5	16.5	10	3.2	33	16	13	48	125	146
FCG-D032	32	54	20	12	4.5	40	20	15	59.4	131	155
FCG-D040	40	63.5	26	14	4.5	49	22	18	71.4	150	178
FCG-D050	50	79	32	16	6	60	25	20	86	173	205
FCG-D063	63	96	38	18	8	74	30	22	105.4	178	215

* 未标注尺寸与基本型相同。The unmentioned dimensions are same as the Basic type.

轻巧型气缸
Light Air Cylinder
Series KCG1

外形尺寸图 Dimensions (mm)

KC(D)G1U

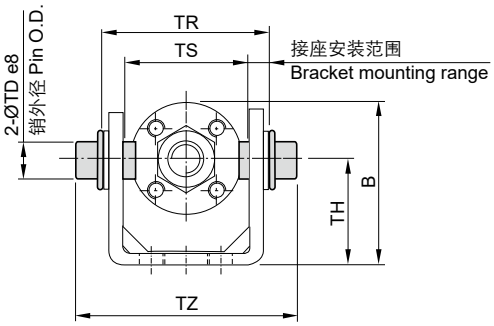

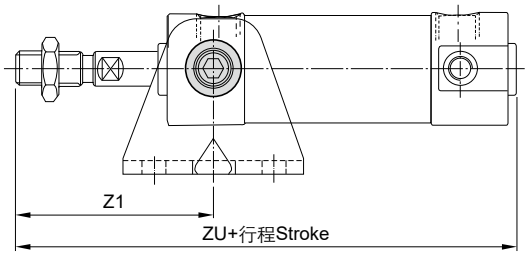

KC(D)G1T

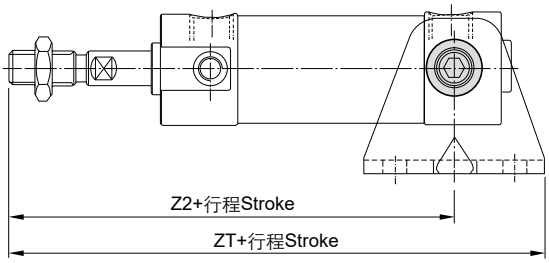

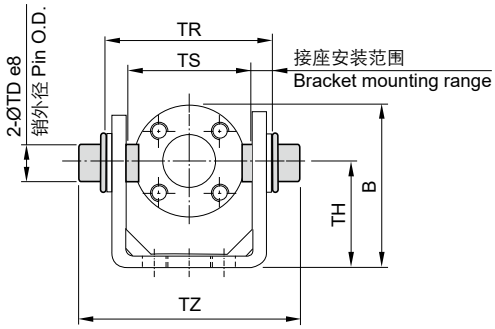

零件号 Part No.	缸径 Bore size	B	TD	TH	TR	TS	TZ	Z1	Z2	ZT	ZU
FCG-T020	20	38	$8^{-0.025}_{-0.047}$	25	39	28	51	46	93	114	106
FCG-T025	25	45.5	$10^{-0.025}_{-0.047}$	30	43	33	57.9	51	98	119	111
FCG-T032	32	54	$12^{-0.032}_{-0.059}$	35	54.5	40	73.3	51	101	125	113
FCG-T040	40	63.5	$14^{-0.032}_{-0.059}$	40	65.5	49	89.5	62	118	146	130
FCG-T050	50	79	$16^{-0.032}_{-0.059}$	50	80	60	109.2	71	136	168	150
FCG-T063	63	96	$18^{-0.032}_{-0.059}$	60	98	74	131	71	136	173	150

* 未标注尺寸与基本型相同。The unmentioned dimensions are same as the Basic type.

附件 Accessories

接座 Pivot bracket

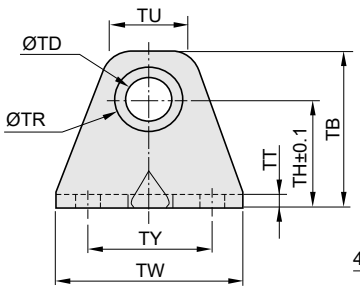

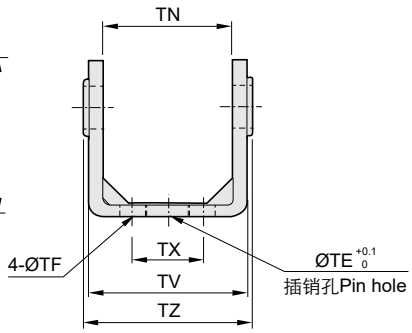

零件号 Part No.	缸径 Bore size	TB	TD	TE	TF	TH	TN	TR	TT
FCG-020-24A	20	36	8	10	5.5	25	29.3	13	3.2
FCG-025-24A	25	43	10	10	5.5	30	33.1	15	3.2
FCG-032-24A	32	50	12	10	6.6	35	40.4	17	4.5
FCG-040-24A	40	58	14	10	6.6	40	49.2	21	4.5
FCG-050-24A	50	70	16	20	9	50	60.4	24	6
FCG-063-24A	63	82	18	20	11	60	74.6	26	8

零件号 Part No.	缸径 Bore size	TU	TV	TW	TX	TY	TZ	插销外径 Pin O.D.
FCG-020-24A	20	18.1	35.8	42	16	28	38.3	$8^{-0.040}_{-0.076}$
FCG-025-24A	25	20.7	39.8	42	20	28	42.1	$10^{-0.040}_{-0.076}$
FCG-032-24A	32	23.6	49.4	48	22	28	53.8	$12^{-0.050}_{-0.093}$
FCG-040-24A	40	27.3	58.4	56	30	30	64.6	$14^{-0.050}_{-0.093}$
FCG-050-24A	50	29.7	72.4	64	36	36	79.2	$16^{-0.050}_{-0.093}$
FCG-063-24A	63	34.3	90.4	74	46	46	97.2	$18^{-0.050}_{-0.093}$

轻巧型气缸
Light Air Cylinder
Series KCG1

外形尺寸图 Dimensions (mm)

I型单肘节接头 I type single kunckle joint

Ø20~Ø32

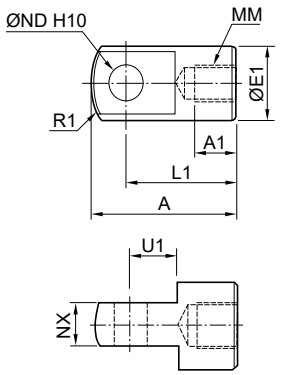

Ø40~Ø63

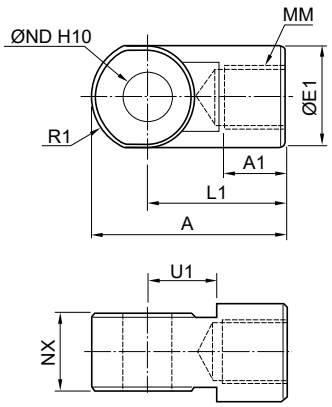

零件号 Part No.	缸径 Bore size	A	A1	E1	L1	MM
FI-G02	20	34	8.5	16	25	M8x1.25
FI-G03	25, 32	41	10.5	20	30	M10x1.25
FI-G04	40	42	14	22	30	M14x1.5
FI-G05	50, 63	56	18	28	40	M18x1.5

零件号 Part No.	缸径 Bore size	ND	NX	NZ	R1	U1
FI-G02	20	$8^{+0.058}_{0}$	$8^{-0.2}_{-0.4}$	16	10.3	11.5
FI-G03	25, 32	$10^{+0.058}_{0}$	$10^{-0.2}_{-0.4}$	20	12.8	14
FI-G04	40	$10^{+0.058}_{0}$	$18^{-0.3}_{-0.5}$	36	12	14
FI-G05	50, 63	$14^{+0.070}_{0}$	$22^{-0.3}_{-0.5}$	44	16	20

Y型双肘节接头 Y type double kunckle joint

Ø20~Ø32

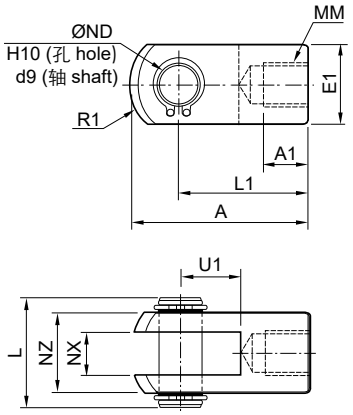

Ø40~Ø63

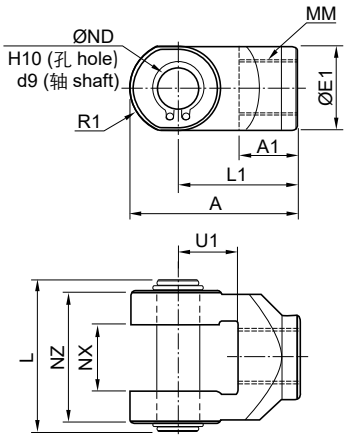

零件号 Part No.	缸径 Bore size	A	A1	E1	L	L1	MM
FY-G02	20	34	8.5	□ 16	21	25	M8x1.25
FY-G03	25, 32	41	10.5	□ 20	25.6	30	M10x1.25
FY-G04	40	42	16	22	41.6	30	M14x1.5
FY-G05	50, 63	56	20	28	50.6	40	M18x1.5

零件号 Part No.	缸径 Bore size	ND	NX	NZ	R1	U1
FY-G02	20	8	$8^{+0.4}_{+0.2}$	16	10.3	11.5
FY-G03	25, 32	10	$10^{+0.4}_{+0.2}$	20	12.8	14
FY-G04	40	10	$18^{+0.5}_{+0.3}$	36	12	14
FY-G05	50, 63	14	$22^{+0.5}_{+0.3}$	44	16	20

销子 Pin

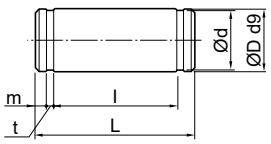

适用双肘节接头 Applicable for Y type double knuckle joint

零件号 Part No.	缸径 Bore size	d	D	l	L	m	t	扣环 Snap ring
FIY-G02	20	7.6	$8^{-0.04}_{-0.08}$	16.2	21	1.5	0.9	STW-8
FIY-G03	25, 32	9.6	$10^{-0.04}_{-0.08}$	20.2	25.6	1.55	1.15	STW-10
FIY-G04	40	9.6	$10^{-0.04}_{-0.08}$	36.2	41.6	1.55	1.15	STW-10
FIY-G05	50, 63	13.4	$14^{-0.05}_{-0.093}$	44.2	50.6	2.05	1.15	STW-14

适用双U型钩 Applicable for double clevis

零件号 Part No.	缸径 Bore size	d	D	l	L	m	t	扣环 Snap ring
FCD-G02	20	7.6	$8^{-0.04}_{-0.076}$	38.6	43.4	1.5	0.9	STW-8
FCD-G2.5	25	9.6	$10^{-0.04}_{-0.076}$	42.6	48	1.55	1.15	STW-10
FCD-G03	32	11.5	$12^{-0.05}_{-0.093}$	54	59.4	1.55	1.15	STW-12
FCD-G04	40	13.4	$14^{-0.05}_{-0.093}$	65	71.4	2.05	1.15	STW-14
FCD-G05	50	15.2	$16^{-0.05}_{-0.093}$	79.6	86	2.05	1.15	STW-16
FCD-G06	63	17.0	$18^{-0.05}_{-0.093}$	97.8	105.4	2.45	1.35	STW-18

ARK

标准型气缸(中型)
Standard Air Cylinder (Medium Bore Size)
Series KMB (Ø40~Ø100)

规格 Specifications

缸径 Bore size (mm)	40	50	63	80	100
接管口径 Port size Rc(PT)	1/4		3/8		1/2
使用流体 Fluid	过滤压缩空气 Filtered compressed air				
动作形式 Action	双动 Double acting				
保证耐压力 Proof pressure (MPa)	1.5				
使用压力范围 Operating pressure range (MPa)	0.05~1.0				
环境及流体温度 Ambient and fluid temperature	-5~60℃ (未冻结 No freezing)				
活塞速度 Piston speed	50~1000 mm/s				
缓冲 Cushion	气缓冲 Air cushion				
行程公差 Stroke tolerance (mm)	~250: $^{+1.0}_{0}$	251~1000: $^{+1.4}_{0}$	1001~1500: $^{+1.8}_{0}$		
* 润滑 Lubrication	不需要 Not required				

* 如需要润滑请使用透平 1 号油 ISOVG32。Please use Turbine oil 1st Grade ISOVG32 if necessary.

行程 / 磁性开关 Stroke/ Auto switch

缸径 Bore size (mm)	标准行程 Standard stroke (mm)	最长行程 Max. stroke (mm)	磁性开关 Auto switch	开关固定码 Switch bracket
40	25, 50, 75, 100, 125, 150, 175, 200, 250, 300, 350, 400, 450, 500	1500	D-M9BK	PC+PO-1
50, 63	25, 50, 75, 100, 125, 150, 175, 200, 250, 300, 350, 400, 450, 500, 600			PC+PO-2
80	25, 50, 75, 100, 125, 150, 175, 200, 250, 300, 350, 400, 450, 500, 600, 700, 800			PC+PO-3
100				PC+PO-4

* 非标行程可定制。Nonstandard stroke can be customized.

型号表示方法 How to Order

KM D B W B 50 - 150 Y

磁环 Magnet

-	无 None
D	内置磁环 Built-in magnet

活塞杆形式 Rod type

-	单活塞杆 Single rod
W	双活塞杆 Double rod

安装形式 Mounting

B	基本型 Basic
L	脚座 Foot
F	前法兰 Front flange
G	后法兰 Rear flange
C	单 U 型钩 Single clevis
D	双 U 型钩 Double clevis
T	中央轴耳 Center trunnion
E	双 U 型钩接座 Double clevis bracket
S	中央轴耳接座 Center trunnion bracket

缸径 Bore size (mm)

行程 Stroke (mm)

附件 Accessory

-	无 None
I	I 型单肘节接头 I type single knuckle joint
Y	Y 型双肘节接头 Y type double knuckle joint

3

标准型气缸(中型)
Standard Air Cylinder (Medium Bore Size)
Series KMB

外形尺寸图 Dimensions (mm)

KM(D)BB

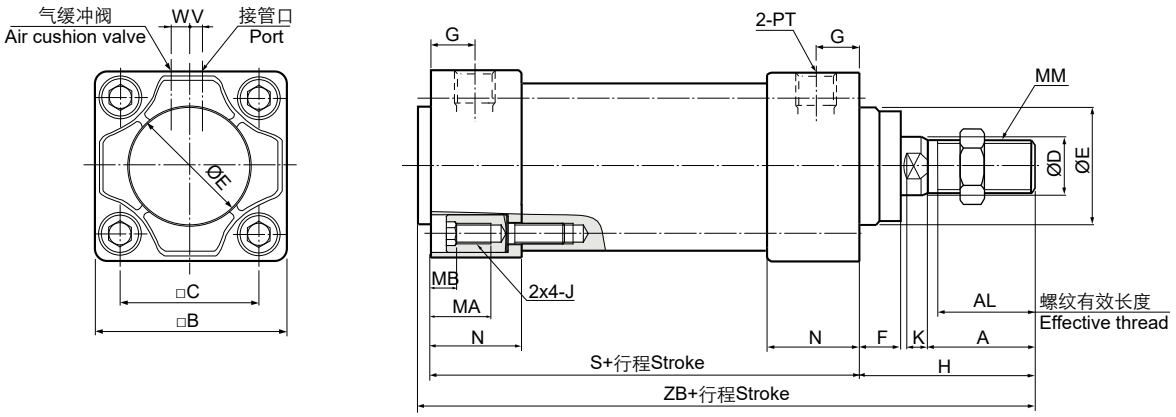

KM(D)BWB

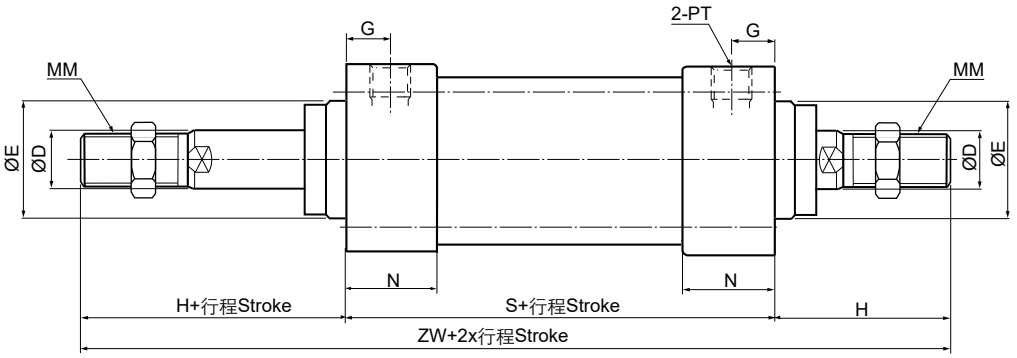

缸径 Bore size	行程 Stroke	A	AL	B	C	D	E	F	G	H	J	K	MA	MB	MM	N	PT	S	V	W	ZB	ZW
40	~500	30	27	52	38	16	35	13	13.5	51	M6x1.0	6	13.7	3.7	M14x1.5	26.5	1/4	84.5	4	9	139.5	186.5
50	~600	35	32	65	46.5	20	40	13.5	15.5	57.5	M8x1.25	7	18.8	6.8	M18x1.5	31.5	1/4	94.5	5	10.5	156.5	209.5
63	~600	35	32	75	56.5	20	45	13.5	16.5	57.5	M8x1.25	7	18.8	6.8	M18x1.5	31.5	3/8	94.5	9	12	156.5	209.5
80	~800	40	37	95	72	25	45	20	19	73	M10x1.5	8	22	7	M22x1.5	38	3/8	114.8	11.5	14	190.8	260.8
100	~800	40	37	114	89	30	55	20	19	73	M10x1.5	8	22	7	M26x1.5	38	1/2	114.8	17	14	190.8	260.8

KM(D)BL

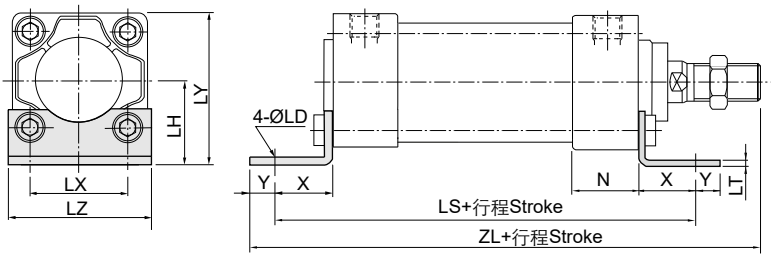

零件号 Part No.	缸径 Bore size	行程 Stroke	LD	LH	LS	LT	LX
FMB-L04	40	~500	9	33	132.5	3.2	38
FMB-L05	50	~600	9	40	148.5	3.2	46
FMB-L06	63	~600	12	45	148.5	3.6	56
FMB-L08	80	~800	12	55	174.8	4.5	72
FMB-L10	100	~800	14	65	178.8	4.5	89

零件号 Part No.	缸径 Bore size	行程 Stroke	LY	LZ	X	Y	ZL
FMB-L04	40	~500	59	55	24	11	170.5
FMB-L05	50	~600	72.5	70	27	11	190
FMB-L06	63	~600	82.5	80	27	14	193
FMB-L08	80	~800	102.5	100	30	14	231.8
FMB-L10	100	~800	122	120	32	16	235.8

* 未标注尺寸与基本型相同。
The unmentioned dimensions are same as the Basic type.

标准型气缸(中型)
Standard Air Cylinder (Medium Bore Size)
Series KMB

外形尺寸图 Dimensions (mm)

KM(D)BF

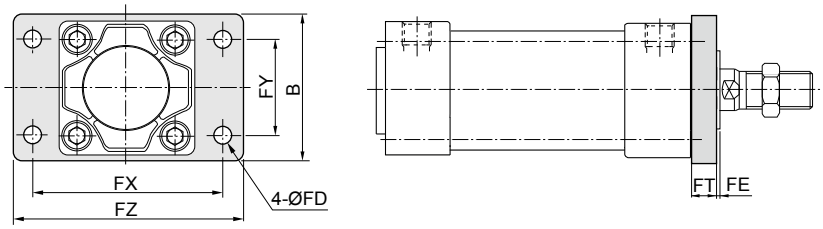

零件号 Part No.	缸径 Bore size	行程 Stroke	B	FD	FE	FT
FMB-F04	40	~500	55	9	3	10
FMB-F05	50	~600	70	9	1.5	12
FMB-F06	63	~600	80	9	1.5	12
FMB-F08	80	~800	100	12	4	16
FMB-F10	100	~800	120	14	4	16

KM(D)BG

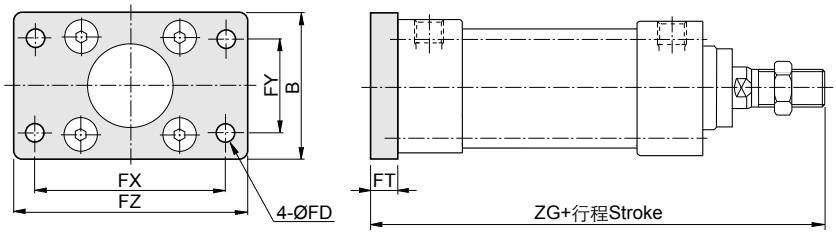

零件号 Part No.	缸径 Bore size	行程 Stroke	FX	FY	FZ	ZG
FMB-F04	40	~500	72	36	90	145.5
FMB-F05	50	~600	90	45	110	164
FMB-F06	63	~600	100	50	120	164
FMB-F08	80	~800	126	63	153	203.8
FMB-F10	100	~800	150	75	178	203.8

* 未标注尺寸与基本型相同。The unmentioned dimensions are same as the Basic type.

KM(D)BC

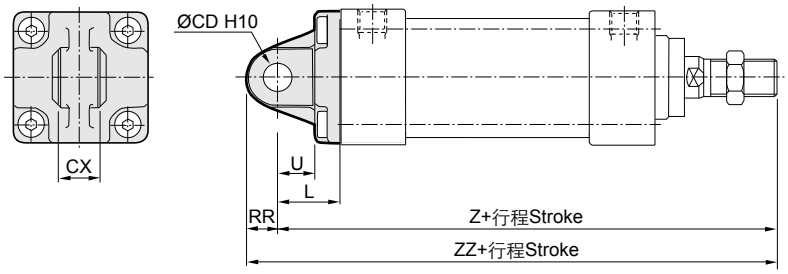

零件号 Part No.	缸径 Bore size	行程 Stroke	CD	CX	L	RR	U	Z	ZZ
FMB-C04	40	~500	10	14	23	11	13	158.5	169.5
FMB-C05	50	~600	14	20	30	15	17	182	197
FMB-C06	63	~600	14	20	30	15	17	182	197
FMB-C08	80	~800	22	30	42	23	26	229.8	252.8
FMB-C10	100	~800	22	30	42	23	26	229.8	252.8

* 未标注尺寸与基本型相同。The unmentioned dimensions are same as the Basic type.

KM(D)BD

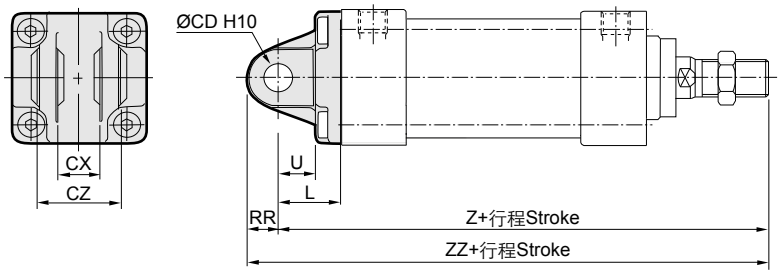

零件号 Part No.	缸径 Bore size	行程 Stroke	CD	CX	CZ	L	RR	U	Z	ZZ
FMB-D04	40	~500	10	14	28	23	11	13	158.5	169.5
FMB-D05	50	~600	14	20	40	30	15	17	182	197
FMB-D06	63	~600	14	20	40	30	15	17	182	197
FMB-D08	80	~800	22	30	60	42	23	26	229.8	252.8
FMB-D10	100	~800	22	30	60	42	23	26	229.8	252.8

* 未标注尺寸与基本型相同。The unmentioned dimensions are same as the Basic type.

KM(D)BT

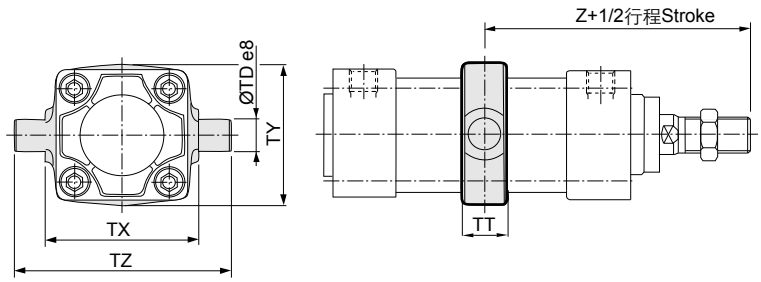

零件号 Part No.	缸径 Bore size	行程 Stroke	TD	TT	TX	TY	TZ	Z
FMB-T04	40	~500	16	22	63	58	95	93
FMB-T05	50	~600	16	22	75	71	107	105
FMB-T06	63	~600	20	28	90	87	130	105
FMB-T08	80	~800	20	34	110	110	150	129
FMB-T10	100	~800	25	40	132	136	182	129

* 未标注尺寸与基本型相同。The unmentioned dimensions are same as the Basic type.

标准型气缸(中型)
Standard Air Cylinder (Medium Bore Size)
Series KMB

外形尺寸图 Dimensions (mm)

KM(D)BE

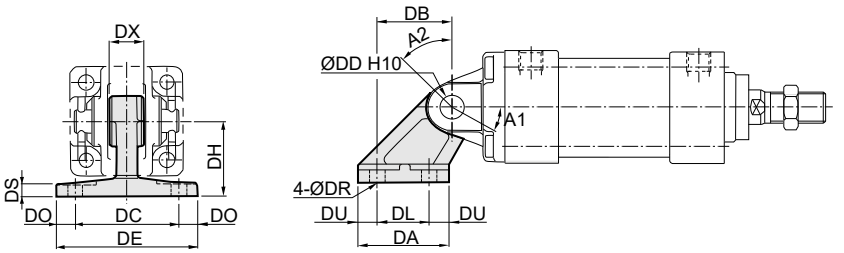

零件号 Part No.	缸径 Bore size	A1	A2	DA	DB	DC	DD	DE
FMB-E04	40	25°	45°	42	32	44	10	62
FMB-E05	50	40°	60°	53	43	60	14	81
FMB-E06	63	40°	60°	53	43	60	14	81
FMB-E08	80	30°	55°	73	64	86	22	111
FMB-E10	100	30°	55°	73	64	86	22	111

零件号 Part No.	缸径 Bore size	DH	DL	DO	DR	DS	DU	DX
FMB-E04	40	33	22	9	9	7	10	14
FMB-E05	50	45	30	10.5	9	8	11.5	20
FMB-E06	63	45	30	10.5	9	8	11.5	20
FMB-E08	80	65	45	12.5	11	10	14	30
FMB-E10	100	65	45	12.5	11	10	14	30

* 未标注尺寸与基本型相同。The unmentioned dimensions are same as the Basic type.

KM(D)BS

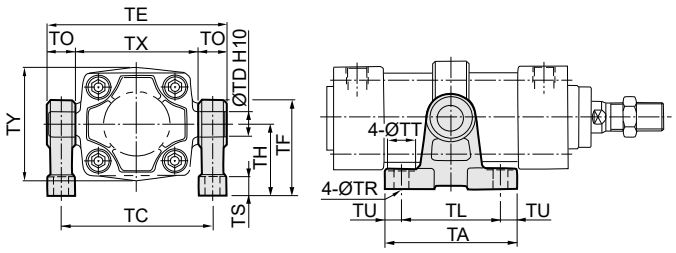

零件号 Part No.	缸径 Bore size	TA	TC	TD	TE	TF	TH	TL	TO	TR	TS	TT	TU	TX	TY
FMB-S04	40	80	79	16	95	60	45	60	16	9	12	17	10	63	58
FMB-S05	50	80	91	16	107	60	45	60	16	9	12	17	10	75	71
FMB-S06	63	100	110	20	130	78	60	70	20	11	14	22	15	90	87
FMB-S08	80	100	130	20	150	78	60	70	20	11	14	22	15	110	110
FMB-S10	100	120	155	25	182	100	75	90	25	13.5	17	24	15	132	136

附件 Accessories

I型单肘节接头 I type single kunckle joint

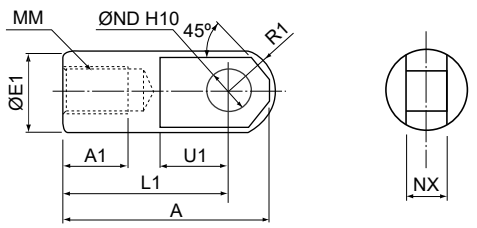

零件号 Part No.	缸径 Bore size	A	A1	E1	L1	MM	ND	NX	R1	U1
FMB-I04	40	50	19	22	40	M14x1.5	10	14	12.5	19
FMB-I05	50, 63	64	24	28	50	M18x1.5	14	20	16.5	24
FMB-I08	80	80	26	40	60	M22x1.5	22	30	23.5	34
FMB-I10	100	80	26	40	60	M26x1.5	22	30	23.5	34

Y型双肘节接头 Y type double kunckle joint

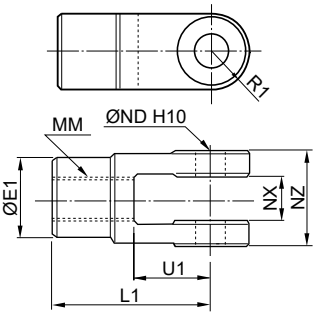

零件号 Part No.	缸径 Bore size	E1	L1	MM	ND	NX	NZ	R1	U1
FMB-Y04	40	22	40	M14x1.5	10	14	28	11	19
FMB-Y05	50, 63	28	50	M18x1.5	14	20	40	14	24
FMB-Y08	80	40	65	M22x1.5	22	30	60	20	34
FMB-Y10	100	40	65	M26x1.5	22	30	60	20	34

销子 Pin

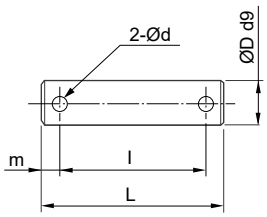

适用Y型双肘节接头
Applicable for Y type double knuckle joint

零件号 Part No.	缸径 Bore size	d	D	l	L	m
FCD-M03	40	3	10	36	44	4
FCD-M05	50, 63	4	14	51	60	4.5
FCD-M08	80, 100	4	22	72	82	5

杆端螺母 Rod end nut

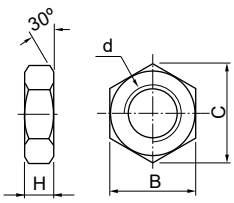

零件号 Part No.	缸径 Bore size	B	C	d	H
FNT-04	40	22	25.4	M14x1.5	8
FNT-05	50, 63	27	31.2	M18x1.5	11
FNT-08	80	32	37	M22x1.5	13
FNT-10	100	41	47.3	M26x1.5	16

ARK

标准型气缸(中型)
Standard Air Cylinder (Medium Bore Size)
Series KCA1 (Ø40~Ø100)

规格 Specifications

缸径 Bore size (mm)	40	50	63	80	100
接管口径 Port size Rc(PT)	1/4	3/8		1/2	
使用流体 Fluid	过滤压缩空气 Filtered compressed air				
动作形式 Action	双动 Double acting				
保证耐压力 Proof pressure (MPa)	1.5				
使用压力范围 Operating pressure range (MPa)	0.05~1.0				
环境及流体温度 Ambient and fluid temperature	-5~60℃ (未冻结 No freezing)				
活塞速度 Piston speed	50~700 mm/s				
缓冲 Cushion	气缓冲 Air cushion				
行程公差 Stroke tolerance (mm)	~250: $^{+1.0}_{0}$ 251~800: $^{+1.4}_{0}$				
* 润滑 Lubrication	不需要 Not required				

* 如需要润滑请使用透平 1 号油 ISOVG32。Please use Turbine oil 1st Grade ISOVG32 if necessary.

行程 / 磁性开关 Stroke/ Auto switch

缸径 Bore size (mm)	标准行程 Standard stroke (mm)	最长行程 Max. stroke (mm)	磁性开关 Auto switch	开关固定码 Switch clamp
40	25, 50, 75, 100, 125, 150, 175, 200, 250, 300, 350, 400, 450, 500	1900	D-M9BK	PC+PCD
50, 63	25, 50, 75, 100, 125, 150, 175, 200, 250, 300, 350, 400, 450, 500, 600	2200		
80, 100	25, 50, 75, 100, 125, 150, 175, 200, 250, 300, 350, 400, 450, 500, 600, 700, 800	1900		

* 非标行程可定制。Nonstandard stroke can be customized.

型号表示方法 How to Order

KC [D] A1 [W] [B] [50] - [150] [ ] [Y]

磁环 Magnet

-	无 None
D	内置磁环 Built-in magnet

活塞杆形式 Rod type

-	单活塞杆 Single rod
W	双活塞杆 Double rod

安装形式 Mounting

B	基本型 Basic
L	脚座 Foot
F	前法兰 Front flange
G	后法兰 Rear flange
C	单 U 型钩 Single clevis
D	双 U 型钩 Double clevis
T	中央轴耳 Center trunnion

缸径 Bore size (mm)

行程 Stroke (mm)

缓冲 Cushion

-	两侧缓冲 Air cushion at both sides
N	无缓冲 Without air cushion
H	后侧缓冲 Air cushion at head side
R	杆侧缓冲 Air cushion at rod side

附件 Accessory

-	无 None
I	I 型单肘节接头 I type single knuckle joint
Y	Y 型双肘节接头 Y type double knuckle joint
J	尼龙伸缩防护套 Nylon tarpaulin rod boot (60℃)
K	耐高温伸缩防护套 Heat resistant tarpaulin rod boot (110℃)

标准型气缸(中型)
Standard Air Cylinder (Medium Bore Size)
Series KCA1

外形尺寸图 Dimensions (mm)

KC(D)A1B

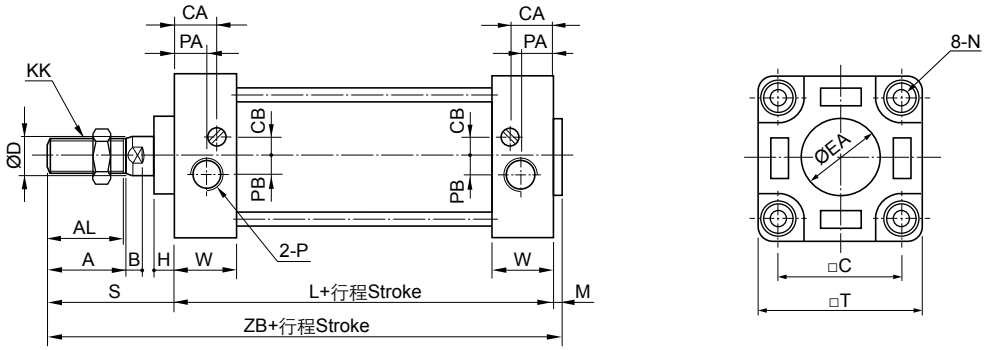

KC(D)A1B-J(K)

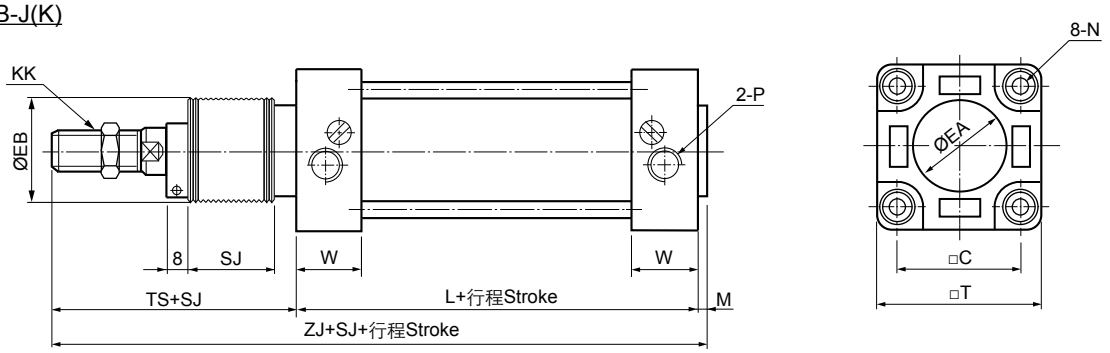

KC(D)A1WB

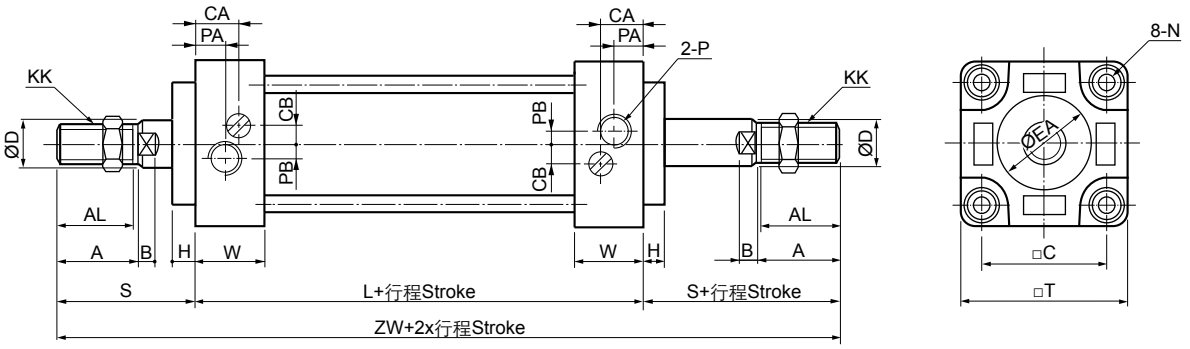

缸径 Bore size	行程 Stroke KC(D)A1B KC(D)A1WB	行程 Stroke KC(D)A1B-J(K)	A	AL	B	C	CA	CB	D	EA	EB	H	KK	L	M	N	P	PA	PB	S	SJ	T	TS	W	ZB	ZJ	ZW
40	~500	20~500	30	27	6	44	17	8	16	32	43	10	M14x1.5	84.5	5.5	M8x1.25	1/4	14	7	51	1/4 行程 Stroke	60	59	27	141	149	186.5
50	~600	20~600	35	32	7	52	18.5	10	20	40	52	10	M18x1.5	90.5	5.5	M8x1.25	3/8	15.5	8	58		70	66	28	154	162	206.5
63	~600	20~600	35	32	7	64	19	10	20	40	52	10	M18x1.5	98.5	5.5	M8x1.25	3/8	16.5	11.5	58		83	66	29	162	170	214.5
80	~800	20~800	40	37	8	78	27	12	25	52	65	13	M22x1.5	116.8	5.5	M12x1.75	1/2	21.5	12	71		102	79	37	193.3	201.3	258.8
100	~800	20~800	40	37	8	92	30	12	30	52	65	12.5	M26x1.5	126.8	5.5	M12x1.75	1/2	24	12	72		116	80	40	204.3	212.3	270.8

标准型气缸(中型)
Standard Air Cylinder (Medium Bore Size)
Series KCA1

外形尺寸图 Dimensions (mm)

KC(D)A1L

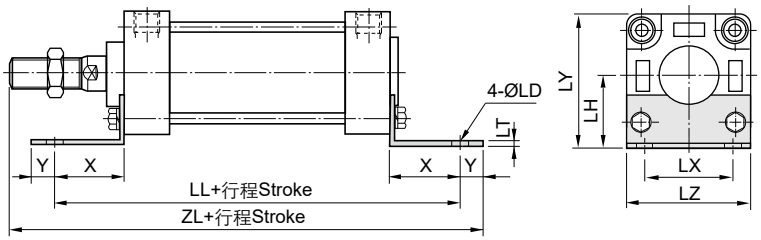

零件号 Part No.	缸径 Bore size	行程 Stroke	LD	LH	LL	LT	LX	LY	LZ	X	Y	ZL
FCA1-L04	40	~500	9	40	138.5	3	42	70	60	27	13	175.5
FCA1-L05	50	~600	9	45	144.5	3	50	80	70	27	13	188.5
FCA1-L06	63	~600	11.5	50	166.5	3	59	91.5	83	34	16	206.5
FCA1-L08	80	~800	13.5	65	204.8	5	76	116	102	44	16	247.8
FCA1-L10	100	~800	13.5	75	212.8	5	92	133	116	43	17	258.8

* 未标注尺寸与基本型相同。
The unmentioned dimensions are same as the Basic type.

KC(D)A1F

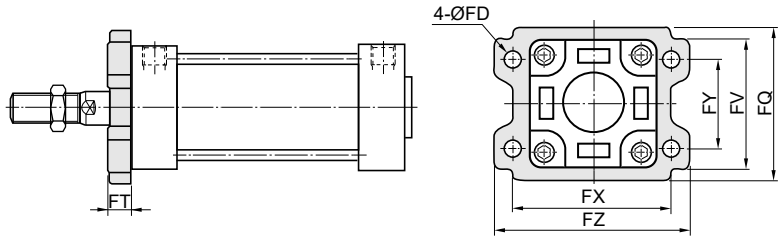

零件号 Part No.	缸径 Bore size	行程 Stroke	FD	FQ	FT	FV	FX	FY	FZ	ZG
FCA1-F04	40	~500	9	71	12	60	80	42	100	147.5
FCA1-F05	50	~600	9	81	12	70	90	50	110	160.5
FCA1-F06	63	~600	11.5	101	15	86	105	59	130	171.5
FCA1-F08	80	~800	13.5	119	18	102	130	76	160	205.8
FCA1-F10	100	~800	13.5	133	18	116	150	92	180	216.8

* 未标注尺寸与基本型相同。
The unmentioned dimensions are same as the Basic type.

KC(D)A1G

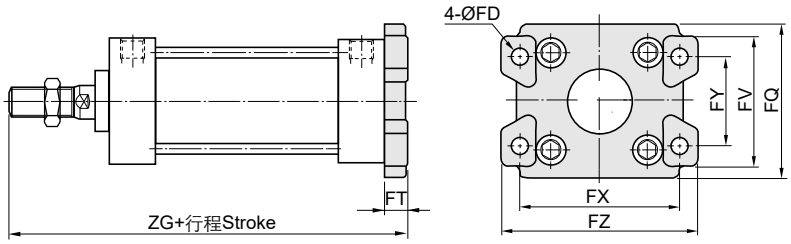

KC(D)A1C

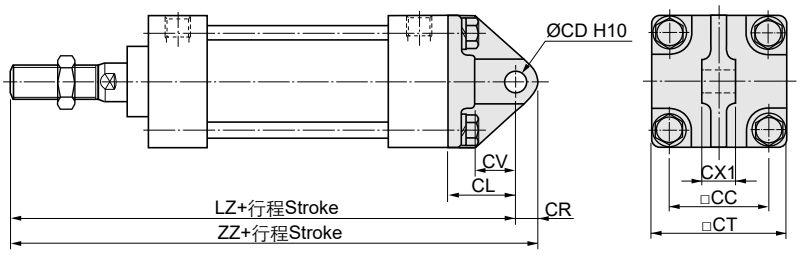

零件号 Part No.		缸径 Bore size	行程 Stroke	CC	CD	CL	CR	CT	CV
KC(D)A1C	KC(D)A1D								
FCA1-C04	FCA1-D04	40	~500	44	$10^{+0.055}_{0}$	30	10	60	18
FCA1-C05	FCA1-D05	50	~600	52	$12^{+0.07}_{0}$	35	12	70	23
FCA1-C06	FCA1-D06	63	~600	64	$16^{+0.07}_{0}$	40	16	83	27
FCA1-C08	FCA1-D08	80	~800	78	$20^{+0.085}_{0}$	48	20	102	34
FCA1-C10	FCA1-D10	100	~800	92	$25^{+0.085}_{0}$	58	25	116	43

零件号 Part No.		缸径 Bore size	CX1	CX2	CZ	LZ	ZZ
KC(D)A1C	KC(D)A1D						
FCA1-C04	FCA1-D04	40	$15^{-0.1}_{-0.3}$	$15^{+0.3}_{+0.1}$	29.5	165.5	175.5
FCA1-C05	FCA1-D05	50	$18^{-0.1}_{-0.3}$	$18^{+0.3}_{+0.1}$	38	183.5	195.5
FCA1-C06	FCA1-D06	63	$25^{-0.1}_{-0.3}$	$25^{+0.3}_{+0.1}$	49	196.5	212.5
FCA1-C08	FCA1-D08	80	$31.5^{-0.1}_{-0.3}$	$31.5^{+0.3}_{+0.1}$	61	235.8	255.8
FCA1-C10	FCA1-D10	100	$35.5^{-0.1}_{-0.3}$	$35.5^{+0.3}_{+0.1}$	64	256.8	281.8

* 未标注尺寸与基本型相同。
The unmentioned dimensions are same as the Basic type.

KC(D)A1D

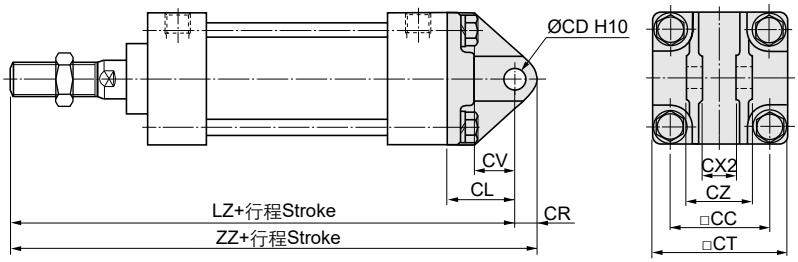

3

标准型气缸(中型)
Standard Air Cylinder (Medium Bore Size)
Series KCA1

外形尺寸图 Dimensions (mm)

KC(D)A1T

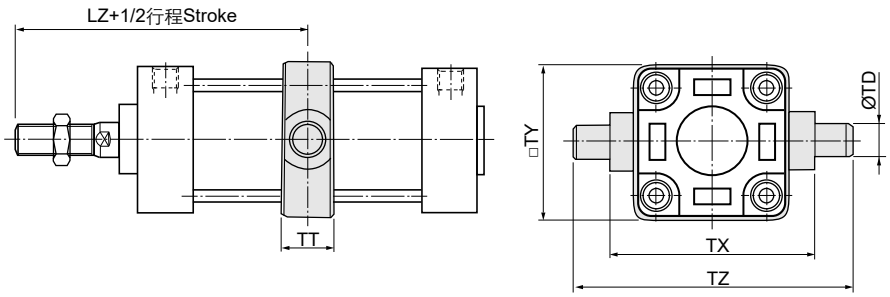

零件号 Part No.	缸径 Bore size	行程 Stroke	LZ	TD	TT	TX	TY	TZ
FCA1-T04	40	~500	93	$15^{-0.032}_{-0.059}$	22	85	62	117
FCA1-T05	50	~600	103	$15^{-0.032}_{-0.059}$	22	95	74	127
FCA1-T06	63	~600	107	$18^{-0.032}_{-0.059}$	28	110	90	148
FCA1-T08	80	~800	129	$25^{-0.040}_{-0.073}$	34	140	110	192
FCA1-T10	100	~800	135	$25^{-0.040}_{-0.073}$	40	162	130	214

* 未标注尺寸与基本型相同。The unmentioned dimensions are same as the Basic type.

附件 Accessories

I型单肘节接头 I type single kunckle joint

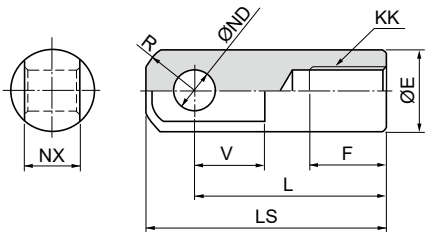

零件号 Part No.	缸径 Bore size	E	F	KK	L	LS	ND	NX	R	V
FCA1-I04	40	24	22	M14x1.5	55	69	$12^{+0.07}_{0}$	$16^{-0.1}_{-0.3}$	15.5	20
FCA1-I05	50, 63	28	27	M18x1.5	60	74	$12^{+0.07}_{0}$	$16^{-0.1}_{-0.3}$	15.5	20
FCA1-I08	80	36	37	M22x1.5	71	91	$18^{+0.07}_{0}$	$28^{-0.1}_{-0.3}$	22.5	26
FCA1-I10	100	40	37	M26x1.5	83	105	$20^{+0.08}_{0}$	$30^{-0.1}_{-0.3}$	24.5	28

Y型双肘节接头&销子 Y type double kunckle joint & pin

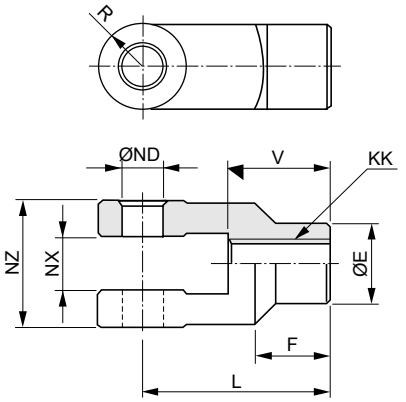

零件号 Part No.	缸径 Bore size	E	F	KK	L	ND	NX	NZ	R	V
FCA1-Y04	40	24	22	M14x1.5	55	$12^{+0.07}_{0}$	$16^{+0.3}_{+0.1}$	38	13	30
FCA1-Y05	50, 63	28	24	M18x1.5	60	$12^{+0.07}_{0}$	$16^{+0.3}_{+0.1}$	38	15	33
FCA1-Y08	80	36	33	M22x1.5	71	$18^{+0.07}_{0}$	$28^{+0.3}_{+0.1}$	55	19	43
FCA1-Y10	100	40	34	M26x1.5	83	$20^{+0.08}_{0}$	$30^{+0.3}_{+0.1}$	61	21	45

销子 Pin

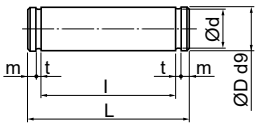

适用双U型钩 Applicable for double clevis

零件号 Part No.	缸径 Bore size	d	D	l	L	m	t
FCDP-2	40	9	$10^{-0.04}_{-0.08}$	29.8	35.8	1.9	1.15
FCDP-3	50	11	$12^{-0.05}_{-0.09}$	38.2	44.3	1.9	1.15
FCDP-4	63	14.5	$16^{-0.05}_{-0.09}$	49.2	55.3	1.9	1.15
FCDP-6	80	18.5	$20^{-0.06}_{-0.12}$	61.2	68.2	2.15	1.35
FCDP-7	100	23	$25^{-0.06}_{-0.12}$	64.2	71.2	2.15	1.35

适用Y型双肘节接头
Applicable for Y type double knuckle joint

零件号 Part No.	缸径 Bore size	d	D	l	L	m	t
FCDP-3	40, 50, 63	11	$12^{-0.05}_{-0.09}$	38.2	44.3	1.9	1.15
FCDP-5	80	16.5	$18^{-0.05}_{-0.09}$	55.2	62.2	2.15	1.35
FCDP-6	100	18.5	$20^{-0.06}_{-0.12}$	61.2	68.2	2.15	1.35

杆端螺母 Rod end nut

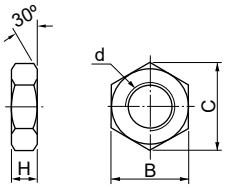

零件号 Part No.	缸径 Bore size	B	C	d	H
FNT-04	40	22	25.4	M14x1.5	8
FNT-05	50, 63	27	31.2	M18x1.5	11
FNT-08	80	32	37	M22x1.5	13
FNT-10	100	41	47.3	M26x1.5	16

ARK

标准型气缸(大缸径)
Standard Air Cylinder (Large Bore Size)
Series KCS1 (Ø125~Ø400)

规格 Specifications

缸径 Bore size (mm)	125	140	160	180	200	250	300	350	400
接管口径 Port size Rc(PT)	1/2		3/4			1		1 1/4	
使用流体 Fluid	过滤压缩空气 Filtered compressed air								
动作形式 Action	双动 Double acting								
保证耐压力 Proof pressure (MPa)	1.5								
使用压力范围 Operating pressure range (MPa)	0.08~1.0								
环境及流体温度 Ambient and fluid temperature	-5~60℃ (未冻结 No freezing)								
活塞速度 Piston speed	50~500 mm/s								
缓冲 Cushion	气缓冲 Air cushion								
行程公差 Stroke tolerance (mm)	~250: $^{+1.0}_{0}$ 251~1000: $^{+1.4}_{0}$ 1001~1500: $^{+1.8}_{0}$ 1501~2000: $^{+2.2}_{0}$								
* 润滑 Lubrication	不需要 Not required								

* 如需要润滑请使用透平 1 号油 ISOVG32。Please use Turbine oil 1st Grade ISOVG32 if necessary.

行程 / 磁性开关 Stroke/ Auto switch

缸径 Bore size (mm)	标准行程 Standard stroke (mm)	最长行程 Max. stroke (mm)	缸筒材质 Barrel material	磁性开关 Auto switch	开关固定码 Switch clamp
125	25, 40, 50, 80, 100, 125, 200, 250, 300, 320, 350, 400, 450, 500, 600, 700, 800, 900, 1000, 1100, 1200	1900	铝合金 Aluminium	D-M9BK	PC+PCD
140					
160					
180			碳钢 / 铝合金 Carbon steel/ Aluminium	D-M9BK (仅铝合金缸筒适用 Only aluminium barrel applicable)	PC+PCD
200					PC+PBL (定制 custom-made)
250			碳钢 Carbon steel	不适用 Not applicable	
300		2000			
350					
400					

* 非标行程可定制。Nonstandard stroke can be customized.

型号表示方法 How to Order

KC [D] S1 [W] [B] [N] [160] - [300] [ ] [Y]

磁环 Magnet

-	无 None
D	内置磁环 Built-in magnet

活塞杆形式 Rod type

-	单活塞杆 Single rod
W	双活塞杆 Double rod

安装形式 Mounting

B	基本型 Basic
L	脚座 Foot
F	前法兰 Front flange
G	后法兰 Rear flange
C	单 U 型钩 Single clevis
D	双 U 型钩 Double clevis
T	中央轴耳 Center trunnion

缸径 Bore size (mm)

行程 Stroke (mm)

润滑类型 Lubrication type

-	油润滑 Lube
N	无油润滑 None-lube

缓冲 Cushion

-	两侧缓冲 Air cushion at both sides
N	无缓冲 Without air cushion
H	后侧缓冲 Air cushion at head side
R	杆侧缓冲 Air cushion at rod side

附件 Accessory

-	无 None
I	I 型单肘节接头 I type single knuckle joint
Y	Y 型双肘节接头 Y type double knuckle joint
J	尼龙伸缩防护套 Nylon tarpaulin rod boot (60℃)
K	耐高温伸缩防护套 Heat resistant tarpaulin rod boot (110℃)

标准型气缸(大缸径)
Standard Air Cylinder (Large Bore Size)
Series KCS1

外形尺寸图 Dimensions (mm)

KC(D)S1B

Ø125~Ø250

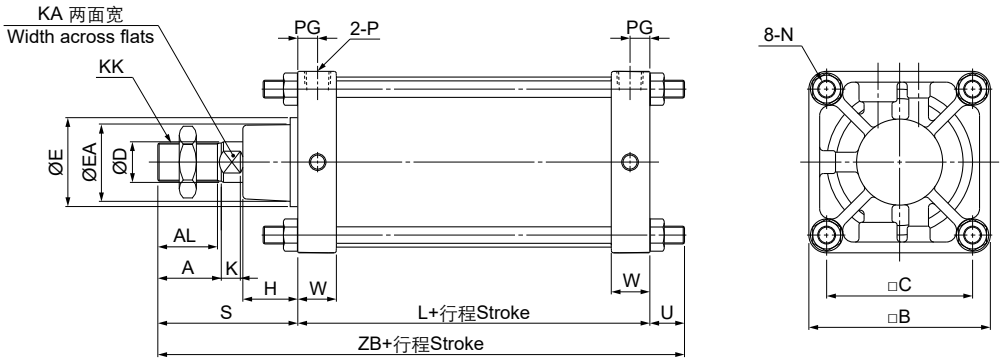

Ø300, Ø350

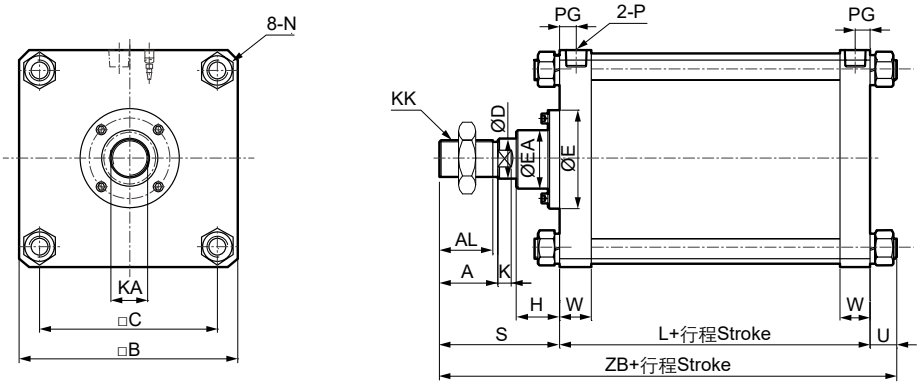

Ø400

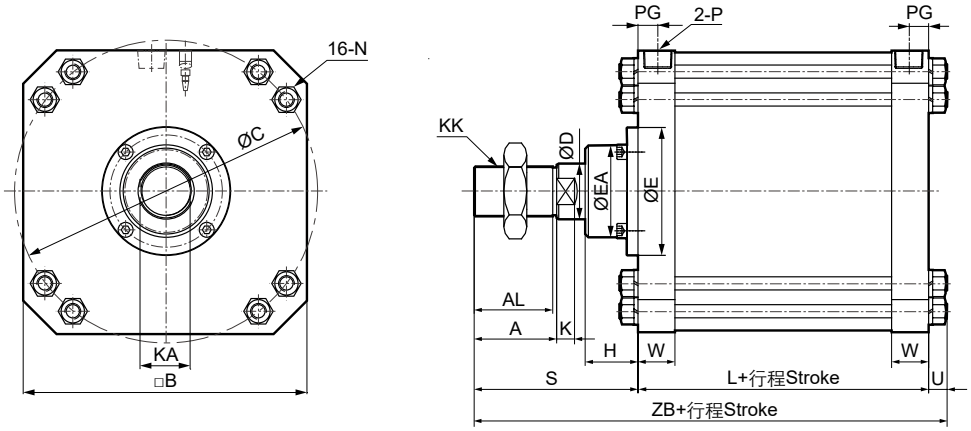

缸径 Bore size	行程 Stroke	A	AL	B	C	D	E	EA	H	K	KA	KK	L	N	P	PG	S	U	W	ZB
125	~1200	50	47	145	115	35	72	59	43	14.5	32	M30x1.5	98	M14x1.5	1/2	15	110	27	35	235
140	~1200	50	47	161	128	35	75	59	43	14.5	32	M30x1.5	98	M14x1.5	1/2	15	110	27	35	235
160	~1200	56	53	184	144	40	81	59	43	14.5	36	M36x1.5	106	M16x1.5	3/4	18.5	120	30.5	39	256.5
180	~1200	63	60	204	162	45	90	70	48	14.5	40	M40x1.5	111	M18x1.5	3/4	18.5	135	35	39	281
200	~1200	63	60	226	182	50	90	75	48	14.5	45	M45x1.5	111	M20x1.5	3/4	18.5	135	35	39	281
250	~1200	71	67	277	225	60	140	96	60	20	56	M56x2	141	M24x1.5	1	22	160	41.5	49	342.5
300	~1200	88	82	330	270	60	150	88	66	22	56	M56x2	170	M30x2	1	24	183	39	46.5	392
350	~1200	110	104	380	300	75	170	125	80	27	70	M68x3	190	M36x3	1 1/4	30	227	46	56	463
400	~1200	125	119	430	480	85	195	140	80	27	75	M76x3	190	M24x1.5	1 1/4	30	248	28	56	466

标准型气缸(大缸径)
Standard Air Cylinder (Large Bore Size)
Series KCS1

外形尺寸图 Dimensions (mm)

KC(D)S1WB

Ø125~Ø250

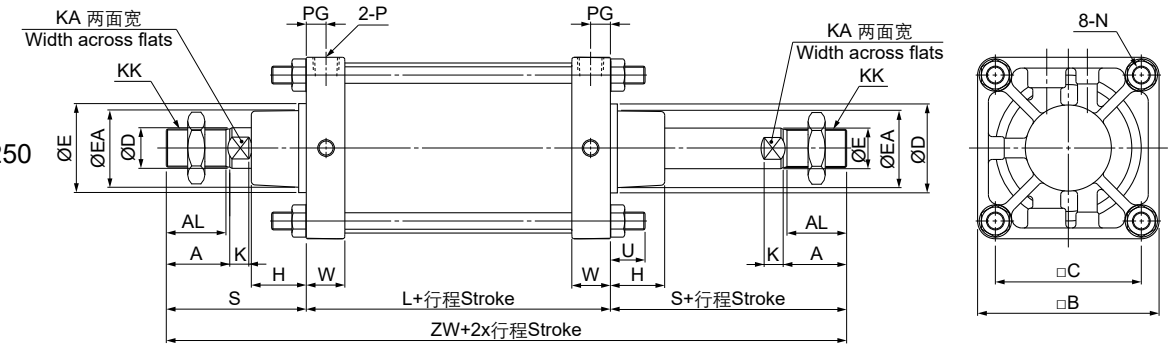

Ø300, Ø350

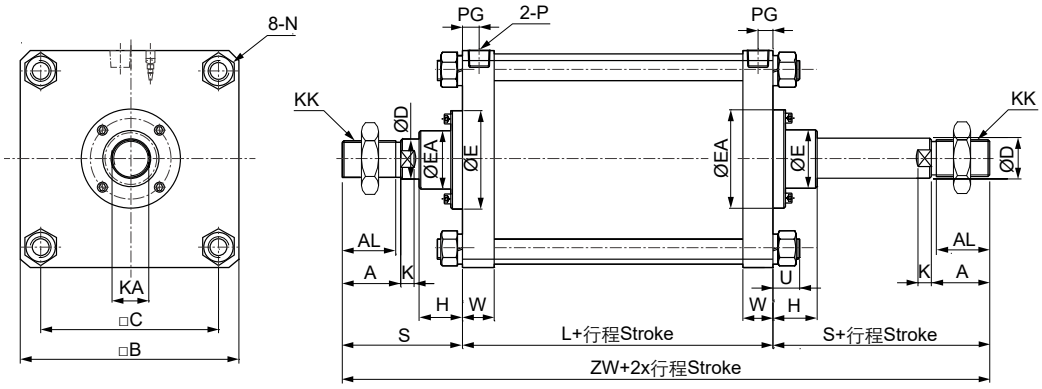

Ø400

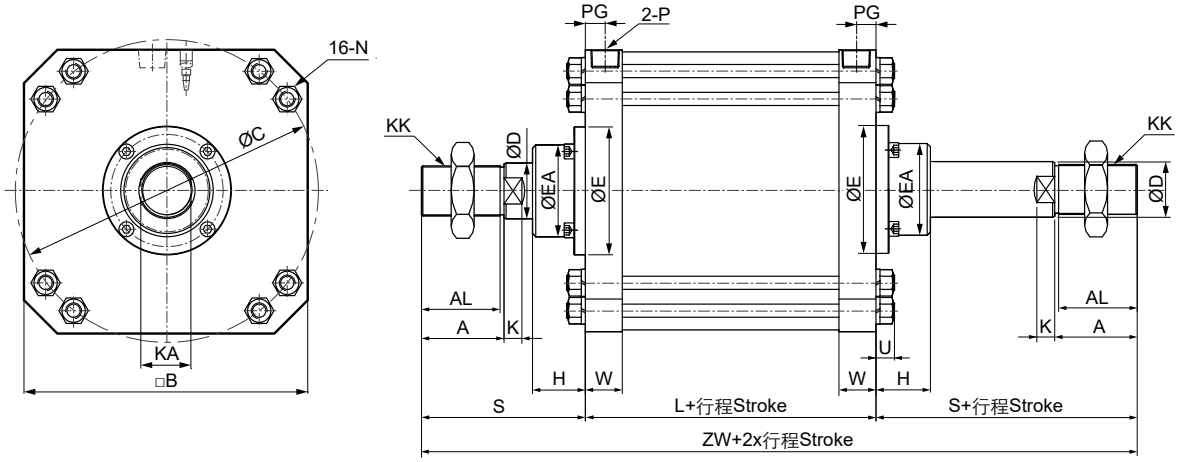

缸径 Bore size	行程 Stroke	A	AL	B	C	D	E	EA	H	K	KA	KK	L	N	P	PG	S	U	W	ZW
125	~1200	50	47	145	115	35	72	59	43	14.5	32	M30x1.5	98	M14x1.5	1/2	15	110	27	35	318
140	~1200	50	47	161	128	35	75	59	43	14.5	32	M30x1.5	98	M14x1.5	1/2	15	110	27	35	318
160	~1200	56	53	184	144	40	81	59	43	14.5	36	M36x1.5	106	M16x1.5	3/4	18.5	120	30.5	39	346
180	~1200	63	60	204	162	45	90	70	48	14.5	40	M40x1.5	111	M18x1.5	3/4	18.5	135	35	39	381
200	~1200	63	60	226	182	50	90	75	48	14.5	45	M45x1.5	111	M20x1.5	3/4	18.5	135	35	39	381
250	~1200	71	67	277	225	60	140	96	60	20	56	M56x2	141	M24x1.5	1	22	160	41.5	49	461
300	~1200	88	82	330	270	60	150	88	66	22	56	M56x2	170	M30x2	1	24	183	39	46.5	536
350	~1200	110	104	380	300	75	170	125	80	27	70	M68x3	190	M36x3	1 1/4	30	227	46	56	644
400	~1200	125	119	430	480	85	195	140	80	27	75	M76x3	190	M24x1.5	1 1/4	30	248	28	56	686

标准型气缸(大缸径)
Standard Air Cylinder (Large Bore Size)
Series KCS1

外形尺寸图 Dimensions (mm)

KC(D)S1L

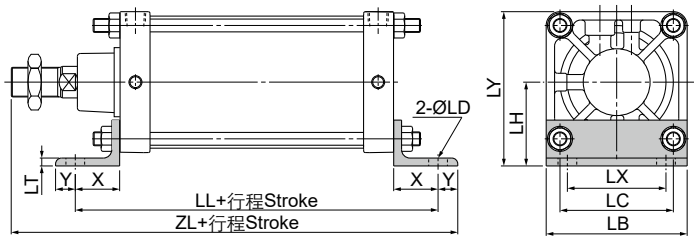

零件号 Part No.	缸径 Bore size	行程 Stroke	LB	LC	LD	LH	LL	LT	LX	LY	X	Y	ZL
FCS1-L12	125	~1200	145	115	19	85	188	8	100	157.5	45	20	273
FCS1-L14	140	~1200	161	128	19	100	188	9	112	180.5	45	20	273
FCS1-L16	160	~1200	184	144	19	106	206	9	118	197	50	25	301
FCS1-L18	180	~1200	204	162	24	125	231	10	132	227	60	30	336
FCS1-L20	200	~1200	226	182	24	132	231	10	150	245	60	30	336
FCS1-L25	250	~1200	277	225	29	160	301	12	180	298.5	80	40	421
FCS1-L30	300	~1200	330	270	33	200	350	15	212	365	90	40	483
FCS1-L35	350	~1200	380	300	39	230	410	25	300	420	110	40	567
FCS1-L40	400	~1200	430	480	39	250	450	30	310	465	130	40	608

* 未标注尺寸与基本型相同。
The unmentioned dimensions are same as the Basic type.

KC(D)S1F

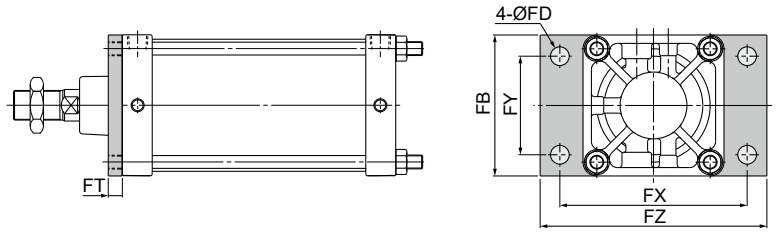

零件号 Part No.	缸径 Bore size	行程 Stroke	FB	FD	FT	FX	FY	FZ	ZG
FCS1-F12	125	~1200	145	19	14	190	100	230	222
FCS1-F14	140	~1200	161	19	20	212	112	255	228
FCS1-F16	160	~1200	184	19	20	236	118	275	246
FCS1-F18	180	~1200	204	24	25	265	132	320	271
FCS1-F20	200	~1200	226	24	25	280	150	335	271
FCS1-F25	250	~1200	277	29	30	355	180	420	331
FCS1-F30	300	~1200	330	33	30	400	212	475	383
FCS1-F35	350	~1200	380	39	35	480	260	570	452
FCS1-F40	400	~1200	430	39	30	540	310	640	468

* 未标注尺寸与基本型相同。
The unmentioned dimensions are same as the Basic type.

KC(D)S1G

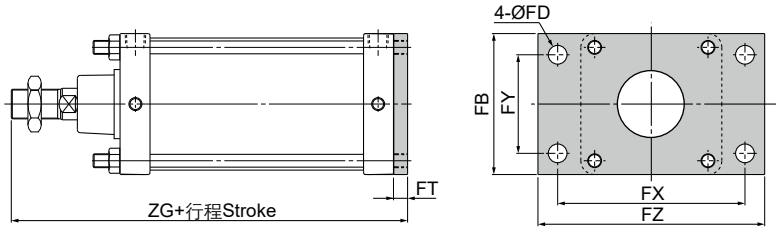

KC(D)S1C

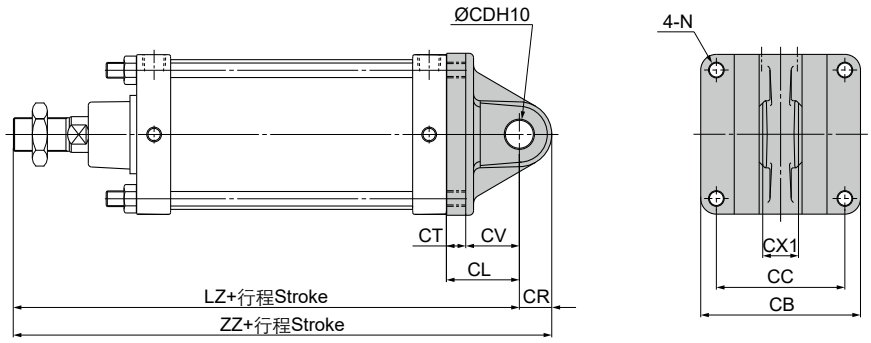

3

标准型气缸(大缸径)
Standard Air Cylinder (Large Bore Size)
Series KCS1

外形尺寸图 Dimensions (mm)

KC(D)S1D

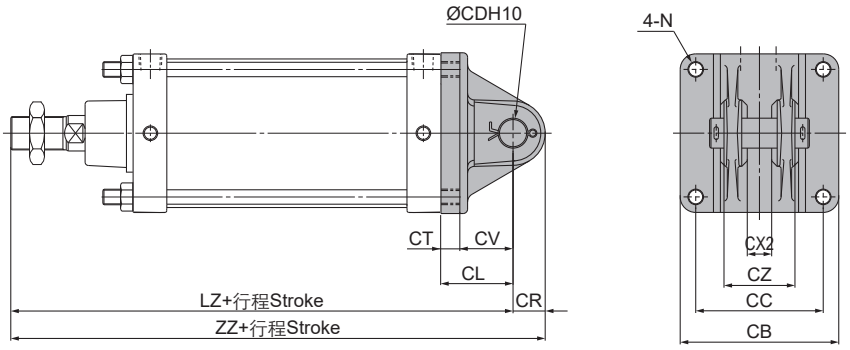

零件号 Part No.		缸径 Bore size	行程 Stroke	CB	CC	CD	CL	CR	CT	CV	CX1	CX2	CZ	LZ	N	ZZ
KC(D)S1C	KC(D)S1D															
FCS1-C12	FCS1-D12	125	~1200	145	115	$25^{+0.084}_{0}$	65	29	17	48	$32^{-0.1}_{-0.3}$	$32^{+0.3}_{+0.1}$	$64^{0}_{-0.2}$	273	M14x1.5	302
FCS1-C14	FCS1-D14	140	~1200	161	128	$28^{+0.084}_{0}$	75	32	17	58	$36^{-0.1}_{-0.3}$	$36^{+0.3}_{+0.1}$	$72^{0}_{-0.2}$	283	M14x1.5	315
FCS1-C16	FCS1-D16	160	~1200	184	144	$32^{+0.1}_{0}$	80	36	20	60	$40^{-0.1}_{-0.3}$	$40^{+0.3}_{+0.1}$	$80^{0}_{-0.2}$	306	M16x1.5	342
FCS1-C18	FCS1-D18	180	~1200	204	162	$40^{+0.1}_{0}$	90	44	23	67	$50^{-0.1}_{-0.3}$	$50^{+0.3}_{+0.1}$	$100^{-0.1}_{-0.3}$	336	M18x1.5	380
FCS1-C20	FCS1-D20	200	~1200	226	182	$40^{+0.1}_{0}$	90	44	25	65	$50^{-0.1}_{-0.3}$	$50^{+0.3}_{+0.1}$	$100^{-0.1}_{-0.3}$	336	M20x1.5	380
FCS1-C25	FCS1-D25	250	~1200	277	225	$50^{+0.1}_{0}$	110	55	30	80	$63^{-0.1}_{-0.3}$	$63^{+0.3}_{+0.1}$	$126^{-0.1}_{-0.3}$	411	M24x1.5	466
FCS1-C30	FCS1-D30	300	~1200	330	270	$63^{+0.12}_{0}$	115	68	30	85	$80^{-0.2}_{-0.5}$	$80^{+0.5}_{+0.2}$	$160^{-0.1}_{-0.3}$	468	M30x2	536
FCS1-C35	FCS1-D35	350	~1200	380	300	$75^{+0.12}_{0}$	135	80	35	100	$95^{-0.2}_{-0.5}$	$95^{+0.5}_{+0.2}$	$195^{-0.1}_{-0.3}$	552	M36x3	632
FCS1-C40	FCS1-D40	400	~1200	430	480	$85^{+0.12}_{0}$	165	90	35	130	$112^{-0.2}_{-0.5}$	$112^{+0.5}_{+0.2}$	$222^{-0.1}_{-0.3}$	603	M24x1.5	693

* 未标注尺寸与基本型相同。The unmentioned dimensions are same as the Basic type.

KC(D)S1T

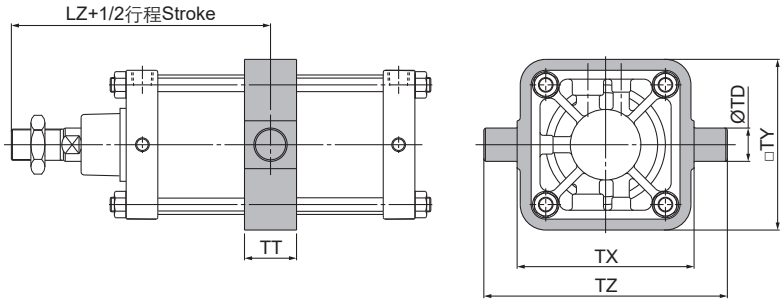

零件号 Part No.	缸径 Bore size	行程 Stroke	LZ	TD	TT	TX	TY	TZ
FCS1-T12	125	~1200	159	$32^{-0.05}_{-0.09}$	50	170	164	234
FCS1-T14	140	~1200	159	$36^{-0.05}_{-0.09}$	55	190	184	262
FCS1-T16	160	~1200	173	$40^{-0.05}_{-0.09}$	59	212	204	292
FCS1-T18	180	~1200	190.5	$45^{-0.05}_{-0.09}$	60	236	228	326
FCS1-T20	200	~1200	190.5	$45^{-0.05}_{-0.09}$	60	265	257	355
FCS1-T25	250	~1200	230.5	$56^{-0.06}_{-0.10}$	69	335	325	447
FCS1-T30	300	~1200	268	$67^{-0.06}_{-0.10}$	80	410	370	544
FCS1-T35	350	~1200	322	$80^{-0.06}_{-0.10}$	90	470	430	630
FCS1-T40	400	~1200	343	$90^{-0.06}_{-0.10}$	100	530	490	710

* 未标注尺寸与基本型相同。The unmentioned dimensions are same as the Basic type.

附件 Accessories

I型单肘节接头 I type single kunckle joint

Ø125~Ø250

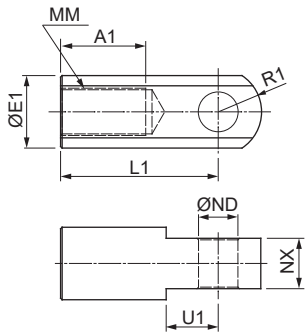

零件号 Part No.	缸径 Bore size	A1	E1	L1	MM	ND	NX	R1	U1
FCS1-I12	125	54	46	100	M30x1.5	$25^{+0.084}_{0}$	$32^{-0.1}_{-0.3}$	27	33
FCS1-I14	140	54	48	105	M30x1.5	$28^{+0.084}_{0}$	$36^{-0.1}_{-0.3}$	30	39
FCS1-I16	160	60	55	110	M36x1.5	$32^{+0.1}_{0}$	$40^{-0.1}_{-0.3}$	34	39
FCS1-I18	180	67	70	125	M40x1.5	$40^{+0.1}_{0}$	$50^{-0.1}_{-0.3}$	42.5	44
FCS1-I20	200	67	70	125	M45x1.5	$40^{+0.1}_{0}$	$50^{-0.1}_{-0.3}$	42.5	44
FCS1-I25	250	75.5	86	160	M56x2	$50^{+0.1}_{0}$	$63^{-0.1}_{-0.3}$	53	66

标准型气缸(大缸径)
Standard Air Cylinder (Large Bore Size)
Series KCS1

外形尺寸图 Dimensions (mm)

I型单肘节接头 I type single kunckle joint

Ø300~Ø400

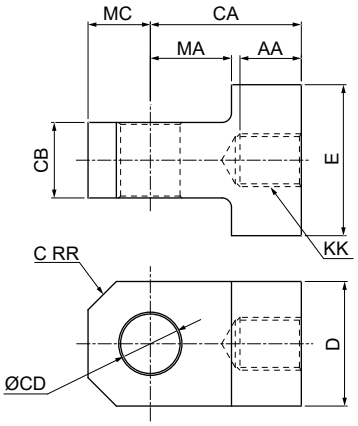

零件号 Part No.	缸径 Bore size	AA	CA	CB	CD	D	E	KK	MA	MC	RR
FCS1-I30	300	65	160	$80^{-0.2}_{-0.5}$	$63^{+0.12}_{0}$	132	160	M56x2	86	66	30
FCS1-I35	350	75	190	$95^{-0.2}_{-0.5}$	$75^{+0.12}_{0}$	160	190	M68x3	100	80	35
FCS1-I40	400	90	220	$112^{-0.2}_{-0.5}$	$85^{+0.12}_{0}$	190	222	M76x3	110	95	45

Y型双肘节接头Y type double kunckle joint

Ø125~Ø250

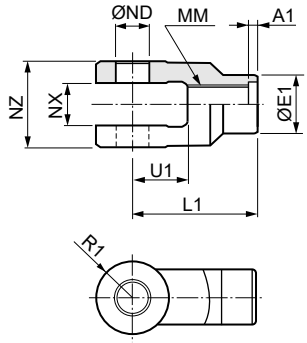

零件号 Part No.	缸径 Bore size	A1	E1	L1	MM	ND	NX	NZ	R1	U1
FCS1-Y12	125	8	46	100	M30x1.5	$25^{+0.084}_{0}$	$32^{+0.3}_{+0.1}$	$64^{-0.1}_{-0.3}$	27	42
FCS1-Y14	140	8	48	105	M30x1.5	$28^{+0.084}_{0}$	$36^{+0.3}_{+0.1}$	$72^{-0.1}_{-0.3}$	30	47
FCS1-Y16	160	8	55	110	M36x1.5	$32^{+0.1}_{0}$	$40^{+0.3}_{+0.1}$	$80^{-0.1}_{-0.3}$	34	46
FCS1-Y18	180	8	70	125	M40x1.5	$40^{+0.1}_{0}$	$50^{+0.3}_{+0.1}$	$100^{-0.1}_{-0.3}$	42.5	54
FCS1-Y20	200	8	70	125	M45x1.5	$40^{+0.1}_{0}$	$50^{+0.3}_{+0.1}$	$100^{-0.1}_{-0.3}$	42.5	54
FCS1-Y25	250	9	86	160	M56x2	$50^{+0.1}_{0}$	$63^{+0.3}_{+0.1}$	$126^{-0.1}_{-0.3}$	53	81

销子Pin

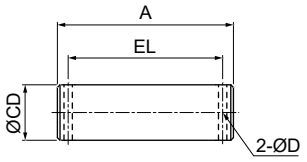

适用Y型双肘节接头 Applicable for Y type double knuckle joint

零件号 Part No.	缸径 Bore size	A	CD	D	EL
FIY-12	125	79.5	$25^{-0.065}_{-0.117}$	4	69.5
FIY-14	140	86.5	$28^{-0.065}_{-0.117}$	4	76.5
FIY-16	160	94.5	$32^{-0.08}_{-0.142}$	4	84.5
FIY-18	180, 200	115	$40^{-0.08}_{-0.142}$	4	105
FIY-25	250	144	$50^{-0.08}_{-0.142}$	5	132
FIY-30	300	200	$63^{-0.1}_{-0.174}$	7	176
FIY-35	350	233	$75^{-0.1}_{-0.174}$	8	210
FIY-40	400	260	$85^{-0.1}_{-0.174}$	8	236

Ø300~Ø400

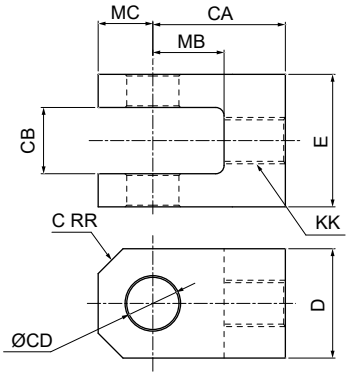

零件号 Part No.	缸径 Bore size	CA	CB	CD	D	E	KK	MB	MC	RR
FCS1-Y30	300	160	$80^{+0.5}_{+0.2}$	$63^{+0.12}_{0}$	132	160	M56x2	86	66	30
FCS1-Y35	350	190	$95^{+0.5}_{+0.2}$	$75^{+0.12}_{0}$	160	190	M68x3	100	80	35
FCS1-Y40	400	220	$112^{+0.5}_{+0.2}$	$85^{+0.12}_{0}$	190	222	M76x3	110	95	45

杆端螺母 Rod end nut

Ø125~Ø250

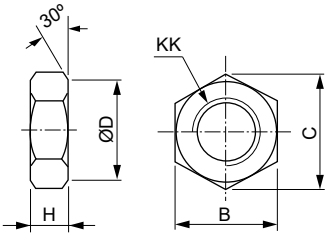

Ø300~Ø400

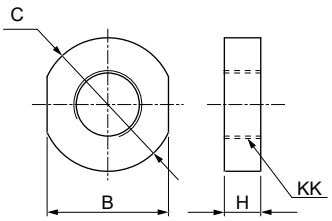

零件号 Part No.	缸径 Bore size	B	C	D	H	KK
FCS1-NT12	125	46	53.1	44	18	M30x1.5
FCS1-NT14	140	46	53.1	44	18	M30x1.5
FCS1-NT16	160	55	63.5	53	21	M36x1.5
FCS1-NT18	180	60	69.3	57	23	M40x1.5
FCS1-NT20	200	70	80.8	67	27	M45x1.5
FCS1-NT25	250	85	98.1	82	34	M56x2
FCS1-NT30	300	100	110	-	30	M56x2
FCS1-NT35	350	110	130	-	40	M68x3
FCS1-NT40	400	120	140	-	40	M76x3

ARK

标准气缸
Standard Air Cylinder
Series SC (Ø32~Ø100)

规格 Specifications

缸径 Bore size (mm)	32	40	50	63	80	100
接管口径 Port size Rc(PT)	1/8	1/4		3/8		1/2
使用流体 Fluid	过滤压缩空气 Filtered compressed air					
动作形式 Action	双动 Double acting					
保证耐压力 Proof pressure (MPa)	1.5					
使用压力范围 Operating pressure range (MPa)	0.1~1.0					
环境及流体温度 Ambient and fluid temperature	-5~60℃ (未冻结 No freezing)					
活塞速度 Piston speed (mm/s)	30~800					
缓冲 Cushion	可调缓冲 Adjustable cushion					
行程公差 Stroke tolerance (mm)	$0\sim250\ ^{+1.0}_{0}$	$251\sim1000\ ^{+1.4}_{0}$		$1001\sim1500\ ^{+1.8}_{0}$		
* 润滑 Lubrication	不需要 Not required					

* 如需要润滑请使用透平 1 号油 ISOVG32。Please use Turbine oil 1st Grade ISOVG32 if necessary.

行程 / 磁性开关 Stroke/ Auto switch

缸径 Bore size (mm)	标准行程 Standard stroke (mm)	最长行程 Max. stroke (mm)	容许行程 Permissible stroke (mm)	磁性开关 Auto switch	开关固定码 Switch clamp
32	25, 50, 75, 80, 100, 125, 150, 160, 175, 200, 250, 300, 350, 400, 450, 500	1000	2000	D-M9BK	PC+PCD
40, 50	25, 50, 75, 80, 100, 125, 150, 160, 175, 200, 250, 300, 350, 400, 450, 500, 600, 700, 800, 900, 1000	1200			
63		1500			
80, 100					

* 非标行程可定制。Nonstandard stroke can be customized.

型号表示方法 How to Order

SC [ ] [50] - [100] - [30] [S] [FA]

类型 Type

-	基本型 Basic
D	双活塞杆 Double rod
J	双活塞杆行程可调 Double rod with adjustable stroke

缸径 Bore size (mm)

行程 Stroke (mm)

可调行程 Adjustable stroke (SCJ)

10	10 mm
20	20 mm
30	30 mm
40	40 mm
50	50 mm
75	75 mm
100	100 mm

磁环 Magnet

-	无 None
S	内置磁环 Built-in magnet

安装形式 Mounting

-	基本型 Basic		SC SCD SCJ
LB	脚座 Foot		SC SCD SCJ
FA	前法兰 Front flange		SC SCD SCJ
FB	后法兰 Rear flange		SC
CA	单 U 型钩 Single clevis		SC
CB	双 U 型钩 Double clevis		SC
TC	中央轴耳 Center trunnion	与 TCM1 配合使用 Use with TCM1	SC SCD SCJ

3

标准气缸
Standard Air Cylinder
Series SC

外形尺寸图 Dimensions (mm)

SC

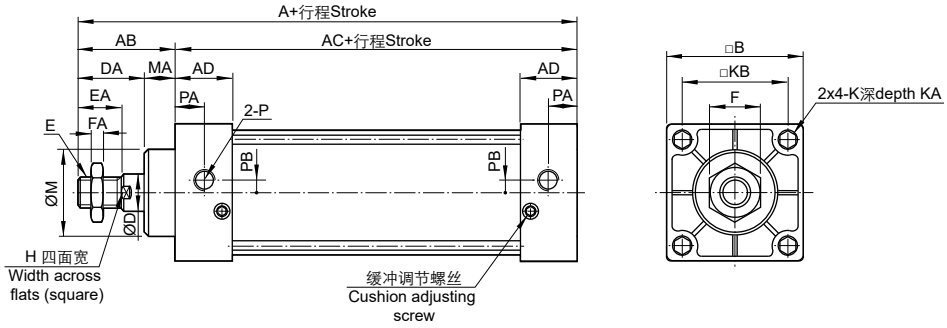

SCD

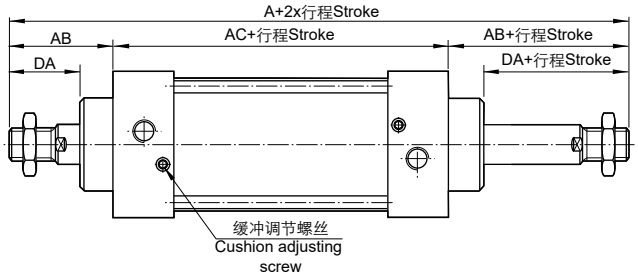

SCJ

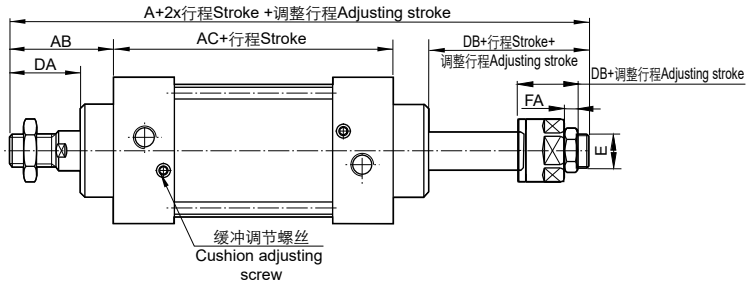

缸径 Bore size	A			AB	AC	AD	B	D	DA	DB	E	EA	F	FA	H	K	KA	KB	M	MA	P	PA	PB
	SC	SCD	SCJ																				
32	140	187	182	47	93	27.5	45	12	32	27	M10x1.25	22	17	6	10	M6x1.0	9.5	33	28	15	1/8	14	5.5
40	142	191	185	49	93	27.5	50	16	34	28	M12x1.25	24	17	7	14	M6x1.0	9.5	37	32	15	1/4	15	6
50	150	207	194	57	93	27.5	62	20	42	29	M16x1.5	32	23	8	17	M6x1.0	9.5	47	38	15	1/4	17	8.5
63	153	210	197	57	96	27.5	75	20	42	29	M16x1.5	32	23	8	17	M8x1.25	9.5	56	38	15	3/8	15	9.5
80	182	257	238.5	75	107	33	94	25	54	35.5	M20x1.5	40	26	10	22	M10x1.5	11.5	70	47	21	3/8	19.5	10
100	188	263	244.5	75	113	33	112	25	54	35.5	M20x1.5	40	26	10	22	M10x1.5	11.5	84	47	21	1/2	16.5	11

ARK

标准气缸(大缸径)
Standard Air Cylinder (Large Bore Size)
Series SC (Ø125~Ø250)

规格 Specifications

缸径 Bore size (mm)	125	160	200	250
接管口径 Port size Rc(PT)	1/2	3/4		1
使用流体 Fluid	过滤压缩空气 Filtered compressed air			
动作形式 Action	双动 Double acting			
保证耐压力 Proof pressure (MPa)	1.5			
使用压力范围 Operating pressure range (MPa)	0.1~1.0			
环境及流体温度 Ambient and fluid temperature	-5~60℃ (未冻结 No freezing)			
活塞速度 Piston speed (mm/s)	30~500			
缓冲 Cushion	可调缓冲 Adjustable cushion			
行程公差 Stroke tolerance (mm)	$0\sim250\ ^{+1.0}_{0}$	$251\sim1000\ ^{+1.4}_{0}$	$1001\sim1500\ ^{+1.8}_{0}$	
* 润滑 Lubrication	不需要 Not required			

* 如需要润滑请使用透平 1 号油 ISOVG32。Please use Turbine oil 1st Grade ISOVG32 if necessary.

行程 / 磁性开关 Stroke/ Auto switch

缸径 Bore size (mm)	标准行程 Standard stroke (mm)	最长行程 Max. stroke (mm)	容许行程 Permissible stroke (mm)	磁性开关 Auto switch	开关固定码 Switch clamp
125	25, 50, 75, 80, 100, 125, 150, 160, 175, 200, 250, 300, 350, 400, 450, 500, 600, 700, 800, 900, 1000	1500	2000	D-M9BK	PC+PCD
160					
200, 250					

* 非标行程可定制。Nonstandard stroke can be customized.

型号表示方法 How to Order

SC [ ] [200] - [150] - [30] [S] [FA]

类型 Type

-	基本型 Basic
D	双活塞杆 Double rod
J	双活塞杆行程可调 Double rod with adjustable stroke

缸径 Bore size (mm)

行程 Stroke (mm)

可调行程 Adjustable stroke (SCJ)

10	10 mm
20	20 mm
30	30 mm
40	40 mm
50	50 mm
75	75 mm
100	100 mm

磁环 Magnet

-	无 None
S	内置磁环 Built-in magnet

安装形式 Mounting

-	基本型 Basic		SC SCD SCJ
LB	脚座 Foot		
FA	前法兰 Front flange		
FB	后法兰 Rear flange		SC
CA	单 U 型钩 Single clevis		
CB	双 U 型钩 Double clevis		
TC	中央轴耳 Center trunnion	与 TCM1 配合使用 Use with TCM1	SC SCD SCJ

3

标准气缸(大缸径)
Standard Air Cylinder (Large Bore Size)
Series SC

外形尺寸图 Dimensions (mm)

SC

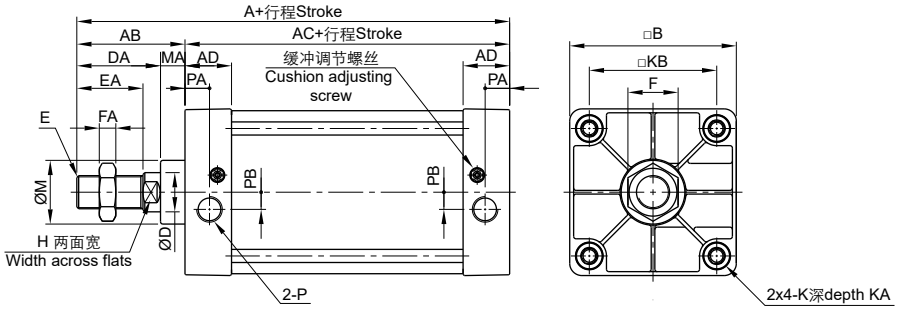

SCD

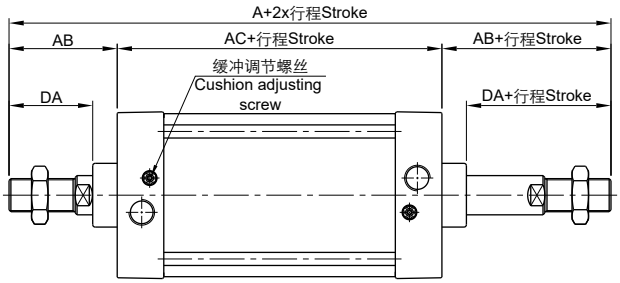

SCJ

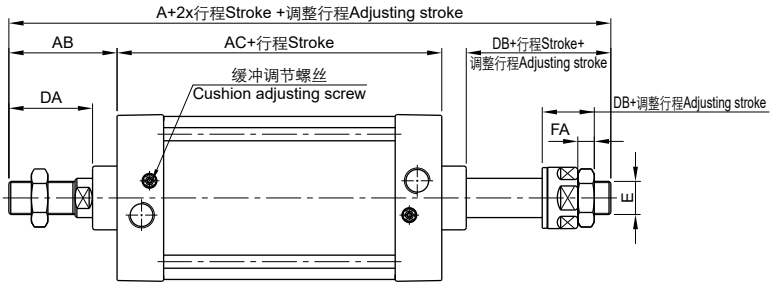

缸径 Bore size	A			AB	AC	AD	B	D	DA	DB	E	EA	F	FA	H	K	KA	KB	M	MA	P	PA	PB
	SC	SCD	SCJ																				
125	203	291	265.5	88	115	38	136	32	68	42.5	M27x2.0	54	41	13.5	27	M12x1.75	16	104	52	20	1/2	20	14
160	239	352	332	113	126	38	174	40	88	68	M36x2.0	72	55	18	36	M16x2.0	15	134	62	25	3/4	20	15
200	244	362	342	118	126	38	214	40	88	68	M36x2.0	72	55	18	36	M16x2.0	15	163	62	30	3/4	20	15
250	294	435	409	141	153	48	267	50	106	80	M42x2.0	84	65	21	46	M20x2.5	19.5	202	86	35	1	25.5	22

标准气缸(大缸径)
Standard Air Cylinder (Large Bore Size)
Series SC

外形尺寸图 Dimensions (mm)

脚座Foot LB

Ø32~Ø100

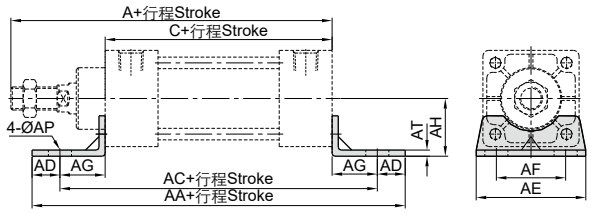

Ø125~Ø250

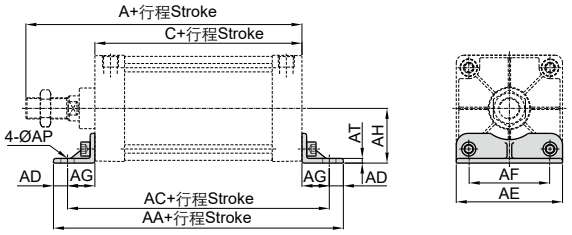

零件号 Part No.	缸径 Bore size	A	C	AA	AC	AD	AE	AF	AG	AH	AP	AT
F-SC32LB	32	140	93	153	134	9.5	50	33	20.5	28	9	3
F-SC40LB	40	142	93	169	140	14.5	57	36	23.5	30	12	3
F-SC50LB	50	150	93	173	149	12	68	47	28	36.5	12	3
F-SC63LB	63	153	96	184	158	13	80	56	31	41	12	3
F-SC80LB	80	182	107	199	167	16	97	70	30	49	14	4
F-SC100LB	100	188	113	209	173	18	112	84	30	57	14	4
F-SC125LB	125	203	115	221	185	18	136	104	35	70	17	6
F-SC160LB	160	239	126	246	206	20	174	134	40	91	17	8
F-SC200LB	200	244	126	276	226	25	214	163	50	113.5	22	9
F-SC250LB	250	294	153	323	273	25	267	201	60	141	26	15

法兰Flange FA/FB

Ø32~Ø100

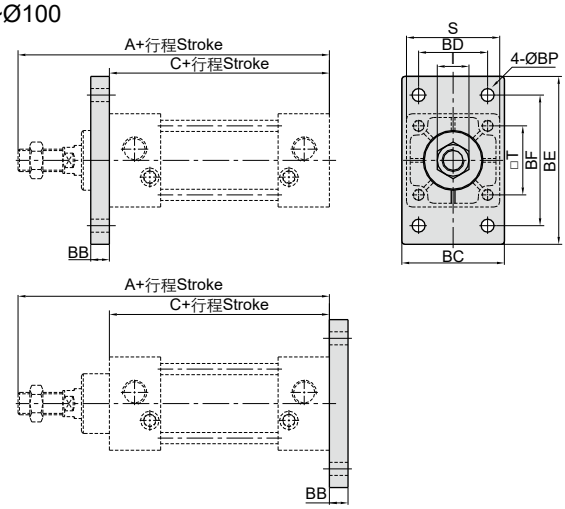

Ø125~Ø250

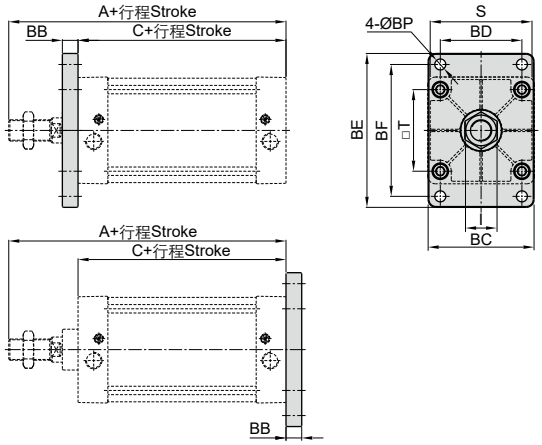

零件号 Part No.	缸径 Bore size	A	C	BB	BC	BD	BE	BF	BP	I	S	T
F-SC32FA	32	140	93	10	47	33	80	58	7	17	45	33
F-SC40FA	40	142	93	10	53	36	90	70	7	17	50	37
F-SC50FA	50	150	93	10	65	47	104	86	9	23	62	47
F-SC63FA	63	153	96	12	75	56	118	98	9	23	75	56
F-SC80FA	80	182	107	16	95	70	140	119	11	26	94	70
F-SC100FA	100	188	113	16	115	84	160	138	11	26	112	84
F-SC125FA	125	203	115	20	135	104	196	168	14	41	136	104
F-SC160FA	160	239	126	20	173	134	248	212	18	55	174	134
F-SC200FA	200	244	126	25	213	163	286	250	18	55	214	163
F-SC250FA	250	294	153	25	255	201	356	312	22	65	267	202

标准气缸(大缸径)
Standard Air Cylinder (Large Bore Size)
Series SC

外形尺寸图 Dimensions (mm)

单U型钩Single clevis CA

Ø32~Ø100

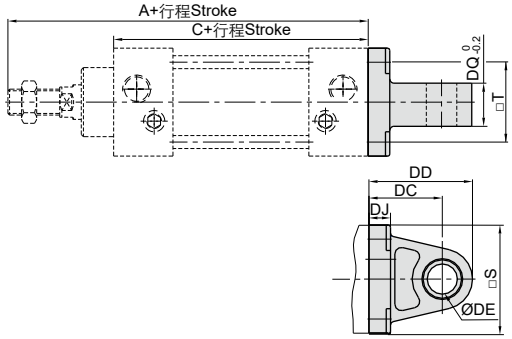

Ø125~Ø250

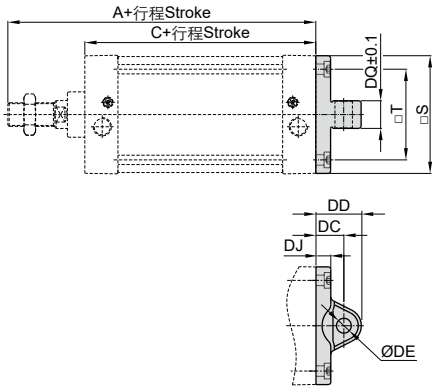

零件号 Part No.	缸径 Bore size	A	C	DC	DD	DE	DJ	DQ	S	T
F-SC32CA	32	140	93	34	44.5	12	9	16	45	33
F-SC40CA	40	142	93	34	44.5	14	9	20	49	37
F-SC50CA	50	150	93	34	46	14	10	20	61	47
F-SC63CA	63	153	96	34	46.5	14	10	20	74	56
F-SC80CA	80	182	107	48	64.5	20	14	32	93	70
F-SC100CA	100	188	113	48	65	20	14	32	111	84
F-SC125CA	125	203	115	32	52	20	17	31.7	135	104
F-SC160CA	160	239	126	40	68	28	19.5	39.7	173	134
F-SC200CA	200	244	126	60	90	28	23	39.7	213	163
F-SC250CA	250	294	153	70	106	36	24	49.7	255	202

双U型钩Double clevis CB

Ø32~Ø100

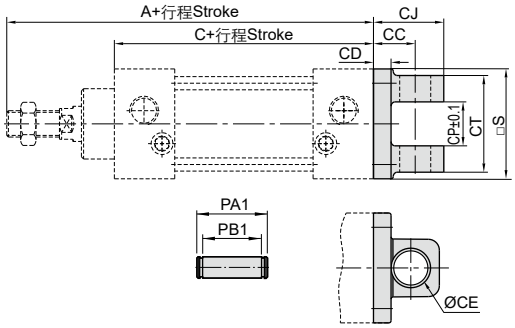

Ø125~Ø250

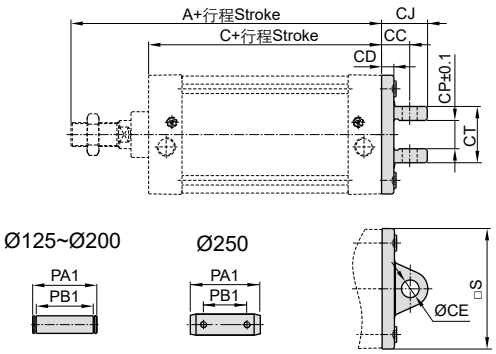

零件号 Part No.	缸径 Bore size	A	C	CC	CD	CE	CJ	CP	CT	PA1	PB1	S
F-SC32CB	32	140	93	19	9	12	29.5	16.3	32	39	32.8	45
F-SC40CB	40	142	93	19	9	14	30.5	20.3	44	51	44.8	49
F-SC50CB	50	150	93	19	10	14	31	20.3	52	59	52.8	61
F-SC63CB	63	153	96	19	10	14	31.5	20.3	52	59	52.8	74
F-SC80CB	80	182	107	32	14	20	48.5	32.3	64	73	64.8	93
F-SC100CB	100	188	113	32	14	20	49	32.3	64	73	64.8	111
F-SC125CB	125	203	115	32	14	20	52	32.1	64	73	64.8	135
F-SC160CB	160	239	126	40	15	28	68	40.1	80	90.2	80.8	173
F-SC200CB	200	244	126	60	23	28	90	40.1	80	90.2	80.8	213
F-SC250CB	250	294	153	70	24	36	106	50.1	100	130	108	255

标准气缸(大缸径)
Standard Air Cylinder (Large Bore Size)
Series SC

外形尺寸图 Dimensions (mm)

中央轴耳Center trunnion TC

Ø32~Ø100

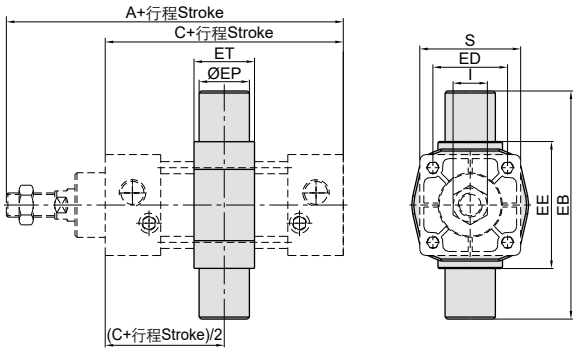

Ø125~Ø250

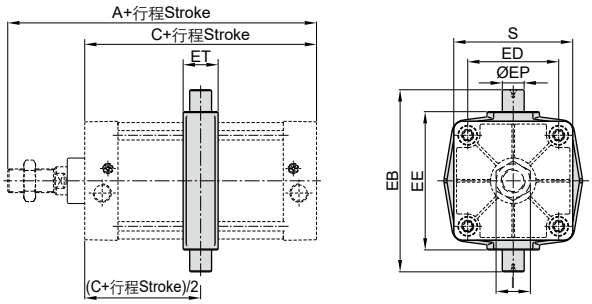

零件号 Part No.	缸径 Bore size	A	C	EB	ED	EE	EP	ET	I	S
F-SC32TC	32	140	93	87	33	55	16	22	17	45
F-SC40TC	40	142	93	113	37	63	25	28	17	50
F-SC50TC	50	150	93	126	47	76	25	28	23	62
F-SC63TC	63	153	96	138	56	88	25	30	23	75
F-SC80TC	80	182	107	164	70	114	25	32	26	94
F-SC100TC	100	188	113	182	84	132	25	38	26	112
F-SC125TC	125	203	115	208	104	158	25	40	41	136
F-SC160TC	160	239	126	272	134	200	36	46	55	174
F-SC200TC	200	244	126	318	163	246	36	46	55	214
F-SC250TC	250	294	153	394	202	304	45	56	65	267

轴耳支架Trunnion bracket TCM1

Ø32~Ø100

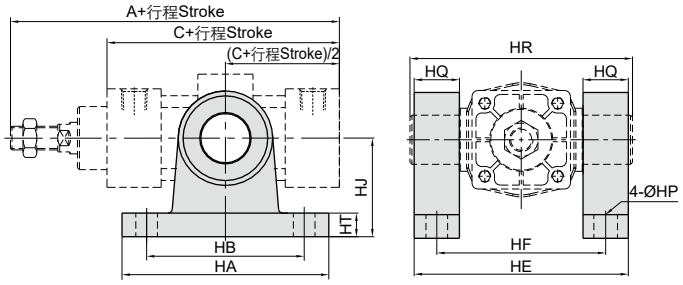

Ø125~Ø250

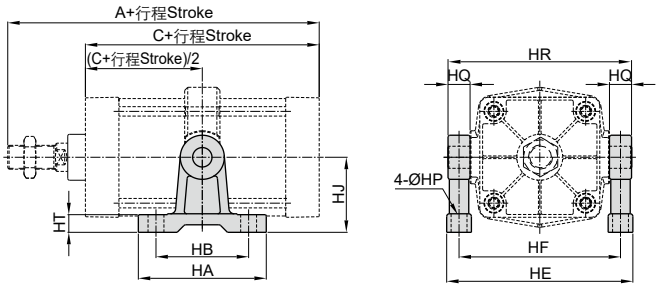

零件号 Part No.	缸径 Bore size	A	C	HA	HB	HE	HF	HP	HQ	HR	HT	HJ
F-SI40TCM1	32	140	93	100	75	90	71	12	16	87	11	54
F-SC40TCM1	40	142	93	103	80	109	86	11	23	113	12	50
F-SC40TCM1	50	150	93	103	80	122	99	11	23	126	12	50
F-SC40TCM1	63	153	96	103	80	134	111	11	23	138	12	50
F-SC80TCM1	80	182	107	110	85	160	137	13	23	164	12	70
F-SC80TCM1	100	188	113	110	85	178	155	13	23	182	12	70
F-SC125TCM1	125	203	115	145	105	211	183	18	25	208	20	85
F-SC160TCM1	160	239	126	185	140	272	236	22	36	272	25	130
F-SC160TCM1	200	244	126	185	140	318	282	22	36	318	25	130
F-SC250TCM1	250	294	153	215	165	394	349	26	45	394	28	160

ARK 标准气缸
Standard Air Cylinder
Series SU (Ø32~Ø100)

规格 Specifications

缸径 Bore size (mm)	32	40	50	63	80	100
接管口径 Port size Rc(PT)	1/8	1/4		3/8		1/2
使用流体 Fluid	过滤压缩空气 Filtered compressed air					
动作形式 Action	双动 Double acting					
保证耐压力 Proof pressure (MPa)	1.5					
使用压力范围 Operating pressure range (MPa)	0.1~1.0					
环境及流体温度 Ambient and fluid temperature	-5~60℃ (未冻结 No freezing)					
活塞速度 Piston speed (mm/s)	30~800					
缓冲 Cushion	可调缓冲 Adjustable cushion					
行程公差 Stroke tolerance (mm)	$0\sim250\ ^{+1.0}_{0}$		$251\sim1000\ ^{+1.4}_{0}$		$1001\sim1500\ ^{+1.8}_{0}$	
* 润滑 Lubrication	不需要 Not required					

* 如需要润滑请使用透平 1 号油 ISOVG32。Please use Turbine oil 1st Grade ISOVG32 if necessary.

行程 / 磁性开关 Stroke/ Auto switch

缸径 Bore size (mm)	标准行程 Standard stroke (mm)	最长行程 Max. stroke (mm)	容许行程 Permissible stroke (mm)	磁性开关 Auto switch	开关固定码 Switch clamp
32	25, 50, 75, 80, 100, 125, 150, 160, 175, 200, 250, 300, 350, 400, 450, 500	1000	1800	D-M9BK	PC+PO-1
40	25, 50, 75, 80, 100, 125, 150, 160, 175, 200, 250, 300, 350, 400, 450, 500, 600, 700, 800, 900, 1000	1200			PC+PO-2
50					
63		1500			
80					PC+PO-3
100					PC+PO-4

* 非标行程可定制。Nonstandard stroke can be customized.

型号表示方法 How to Order

SU [ ] [50] - [100] - [30] [S] [FA]

类型 Type

-	基本型 Basic
D	双活塞杆 Double rod
J	双活塞杆行程可调 Double rod with adjustable stroke

缸径 Bore size (mm)

行程 Stroke (mm)

可调行程 Adjustable stroke (SUJ)

10	10 mm
20	20 mm
30	30 mm
40	40 mm
50	50 mm
75	75 mm
100	100 mm

磁环 Magnet

-	无 None
S	内置磁环 Built-in magnet

安装形式 Mounting

-	基本型 Basic		SU SUD SUJ
LB	脚座 Foot	与 SC 系列通用 Common use with Series SC	
FA	前法兰 Front flange		
FB	后法兰 Rear flange		SU
CA	单 U 型钩 Single clevis		
CB	双 U 型钩 Double clevis		
TC	中央轴耳 Center trunnion	与 TCM1 配合使用 Use with TCM1	SU SUD SUJ

标准气缸
Standard Air Cylinder
Series SU

外形尺寸图 Dimensions (mm)

SU

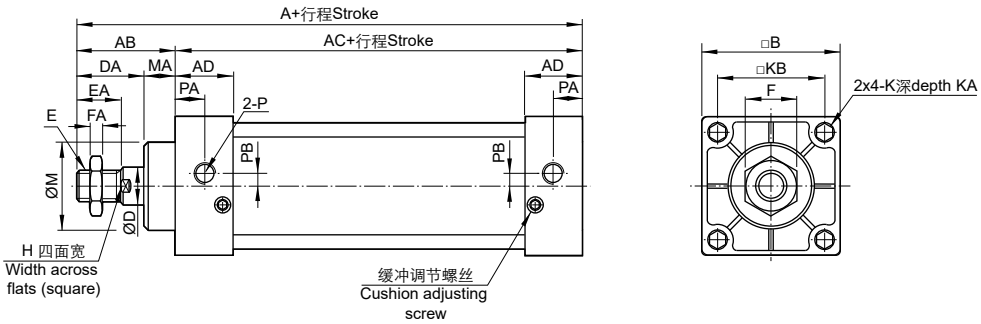

SUD

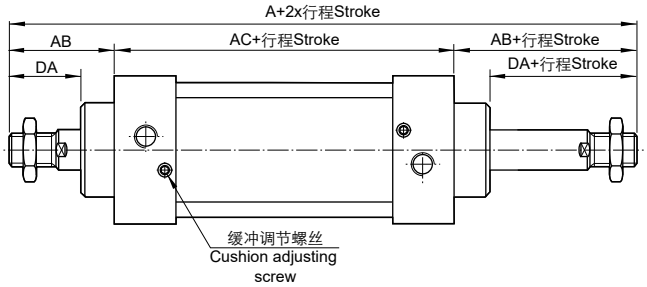

SUJ

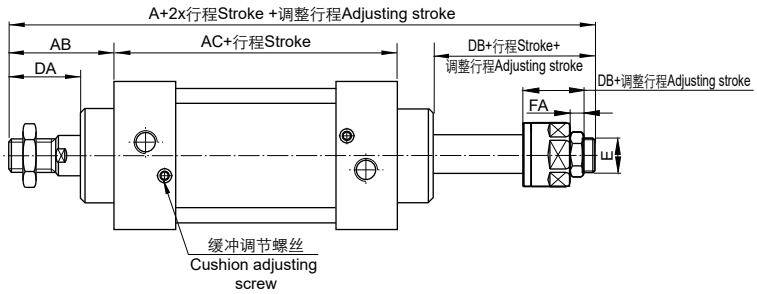

缸径 Bore size	A			AB	AC	AD	B	D	DA	DB	E	EA	F	FA	H	*K	*KA	KB	M	MA	P	PA	PB
	SU	SUD	SUJ																				
32	140	187	182	47	93	27.5	45	12	32	27	M10x1.25	22	17	6	10	M6x1.0(M5x0.8)	9.5(10)	33	28	15	1/8	14	5.5
40	142	191	185	49	93	27.5	50	16	34	28	M12x1.25	24	17	7	14	M6x1.0(M5x0.8)	9.5(9)	37	32	15	1/4	15	6
50	150	207	194	57	93	27.5	62	20	42	29	M16x1.5	32	23	8	17	M6x1.0(M5x0.8)	9.5(9.5)	47	38	15	1/4	17	8.5
63	153	210	197	57	96	27.5	75	20	42	29	M16x1.5	32	23	8	17	M8x1.25(M6x1.0)	9.5(7.5)	56	38	15	3/8	15	9.5
80	182	257	238.5	75	107	33	94	25	54	35.5	M20x1.5	40	26	10	22	M10x1.5(M8x1.25)	11.5(11)	70	47	21	3/8	19.5	10
100	188	263	244.5	75	113	33	112	25	54	35.5	M20x1.5	40	26	10	22	M10x1.5(M8x1.25)	11.5(11)	84	47	21	1/2	16.5	11

* ( ) 为如果使用中央轴耳的尺寸。( ) shows dimensions if center trunnion used.

标准气缸
Standard Air Cylinder
Series SU

外形尺寸图 Dimensions (mm)

中央轴耳Center trunnion TC

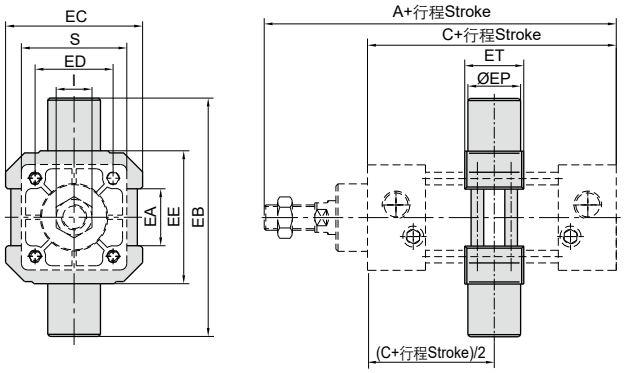

零件号 Part No.	缸径 Bore size	A	C	EA	EB	EC	ED	EE	EP	ET	I	S
F-SU32TC	32	140	93	20	74	52	33	50	12	22	17	45
F-SU40TC	40	142	93	27	113	65	37	63	25	28	17	50
F-SU50TC	50	150	93	31	126	75	47	76	25	28	23	62
F-SU63TC	63	153	96	42	138	90	56	88	25	30	23	75
F-SU80TC	80	182	107	54	164	112	70	114	25	32	26	94
F-SU100TC	100	188	113	68	182	135	84	132	25	38	26	112

轴耳支架Trunnion bracket TCM1

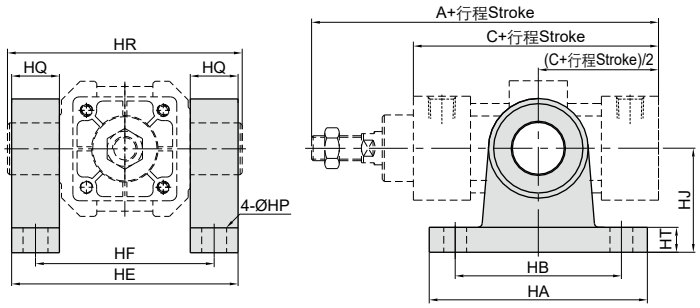

零件号 Part No.	缸径 Bore size	A	C	HA	HB	HE	HF	HJ	HP	HQ	HR	HT
F-SI32TCM1	32	140	93	80	60	72	62	40	9	12	74	11
F-SC40TCM1	40	142	93	103	80	109	86	50	11	23	113	12
F-SC40TCM1	50	150	93	103	80	122	99	50	11	23	126	12
F-SC40TCM1	63	153	96	103	80	134	111	50	11	23	138	12
F-SC80TCM1	80	182	107	110	85	160	137	70	13	23	164	12
F-SC80TCM1	100	188	113	110	85	178	155	70	13	23	182	12

ARK

ISO15552标准气缸
ISO15552 Standard Air Cylinder
Series KCP95 (Ø32~Ø125)

规格 Specifications

缸径 Bore size (mm)	32	40	50	63	80	100	125
接管口径 Port size	G1/8	G1/4		G3/8		G1/2	
使用流体 Fluid	过滤压缩空气 Filtered compressed air						
动作形式 Action	双动 Double acting						
保证耐压力 Proof pressure (MPa)	1.5						
使用压力范围 Operating pressure range (MPa)	0.05~1.0						
环境及流体温度 Ambient and fluid temperature	-5~60℃ (未冻结 No freezing)						
活塞速度 Piston speed	50~1000 mm/s						
缓冲 Cushion	气缓冲 Air cushion						
行程公差 Stroke tolerance (mm)	~250: $^{+1.0}_{0}$ 251~1000: $^{+1.4}_{0}$ 1001~1500: $^{+1.8}_{0}$						
* 润滑 Lubrication	不需要 Not required						

* 如需要润滑请使用透平 1 号油 ISOVG32。Please use Turbine oil 1st Grade ISOVG32 if necessary.

行程 / 磁性开关 Stroke/ Auto switch

缸径 Bore size (mm)	标准行程 Standard stroke (mm)	最长行程 Max. stroke (mm)	磁性开关 Auto switch	开关固定码 Switch clamp
32, 40	25, 50, 80, 100, 125, 160, 200, 250, 320, 400, 500	800	D-M9BK	PS
50, 63	25, 50, 80, 100, 125, 160, 200, 250, 320, 400, 500, 600	1200		
80	25, 50, 80, 100, 125, 160, 200, 250, 320, 400, 500, 600, 700, 800	1400		
100, 125		1500		

* 非标行程可定制。Nonstandard stroke can be customized.

型号表示方法 How to Order

KCP95S D W B 80 - 100

磁环 Magnet

-	无 None
D	内置磁环 Built-in magnet

活塞杆形式 Rod type

-	单活塞杆 Single rod
W	双活塞杆 Double rod

安装形式 Mounting

B	基本型 Basic
L	脚座 Foot
F	前法兰 Front flange
G	后法兰 Rear flange
C	单 U 型钩 Single clevis
D	双 U 型钩 Double clevis
T	中央轴耳 Center trunnion
E	双 U 型钩接座 Double clevis bracket

缸径 Bore size (mm)

行程 Stroke (mm)

ISO15552标准气缸
ISO15552 Standard Air Cylinder
Series KCP95

外形尺寸图 Dimensions (mm)

KCP95S(D)B

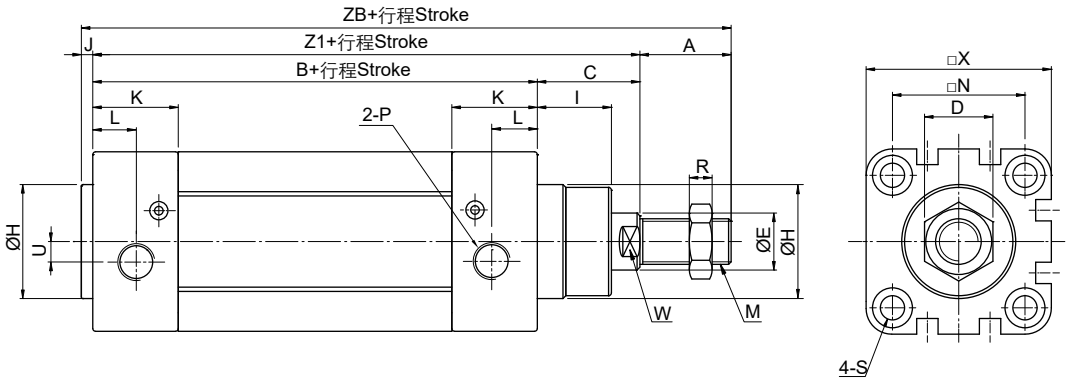

KCP95S(D)WB

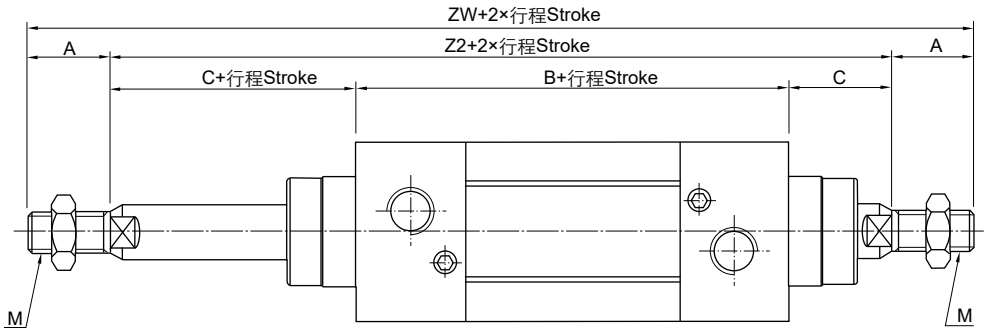

缸径 Bore size	A	B	C	D	E	H	I	J	K	L	M	N	P	R	S	U	W	X	Z1	Z2	ZB	ZW
32	22	94	26	17	12	30	18	4	25.1	12.6	M10x1.25	32.5	G1/8	6	M6x1.0	5.5	10	45.5	120	146	146	190
40	24	105	30	17	16	35	21.5	4	29.6	14.6	M12x1.25	38	G1/4	7	M6x1.0	6	13	51.5	135	165	163	213
50	32	106	37	23	20	40	28	4	29.6	14.6	M16x1.5	46.5	G1/4	8	M8x1.25	8.5	17	64.5	143	180	179	244
63	32	121	37	23	20	45	28.5	4	35.6	18.1	M16x1.5	56.5	G3/8	8	M8x1.25	10	17	75.5	158	195	194	259
80	40	128	46	26	25	45	34.7	4	35.9	17.9	M20x1.5	72	G3/8	12	M10x1.5	12.7	22	93.5	174	220	218	300
100	40	138	51	26	25	55	38.2	4	38.8	19.8	M20x1.5	89	G1/2	12	M10x1.5	11.8	22	111.5	189	240	233	320
125	54	160	65	35	32	60	46	6	45	18	M27x2.0	110	G1/2	10	M12x1.75	8	27	134.5	225	290	285	398

KCP95S(D)L

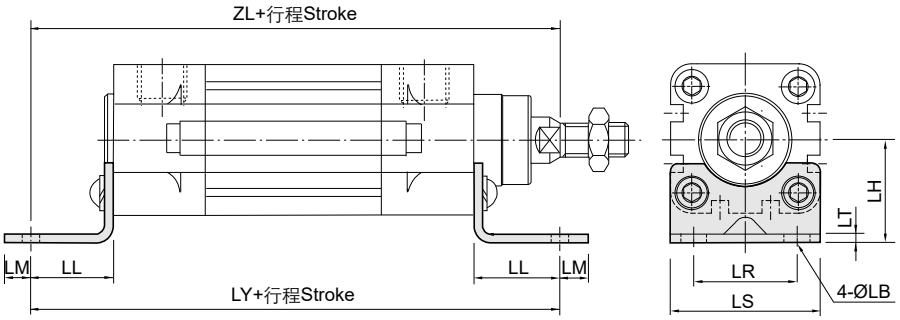

零件号 Part No.	缸径 Bore size	LB	LH	LM	LL	LR	LS	LT	LY	ZL
FC95-L03	32	7	32	10	24	32	46	5	142	144
FC95-L04	40	9	36	11	28	36	52	5	161	163
FC95-L05	50	9	45	12	32	45	65	5	170	175
FC95-L06	63	9	50	12	32	50	75	5	185	190
FC95-L08	80	12	63	14	41	63	95	6	210	215
FC95-L10	100	14	71	16	41	75	114	6	220	230
FC95-L12	125	16.5	90	22	45	90	131	8	250	270

* 未标注尺寸与基本型相同。
The unmentioned dimensions are same as the Basic type.

ISO15552标准气缸
ISO15552 Standard Air Cylinder
Series KCP95

外形尺寸图 Dimensions (mm)

KCP95S(D)F

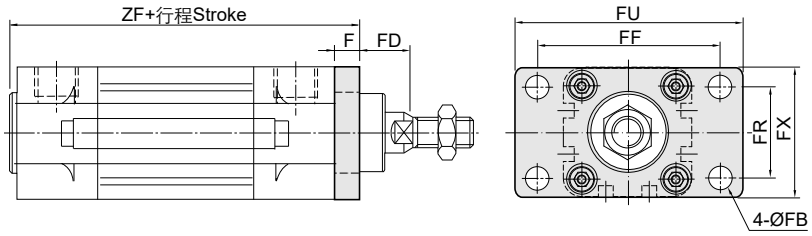

零件号 Part No.	缸径 Bore size	F	FB	FD	FF	FR	FU	FX	ZF	ZG
FC95-F03	32	10	7	16	64	32	79	50	108	130
FC95-F04	40	10	9	20	72	36	90	52	120	145
FC95-F05	50	12	9	25	90	45	110	65	122	155
FC95-F06	63	12	9	25	100	50	125	76	138	170
FC95-F08	80	16	12	30	126	63	154	94	150	190
FC95-F10	100	16	14	35	150	75	178	112	160	205
FC95-F12	125	20	16	45	180	90	220	140	186	245

* 未标注尺寸与基本型相同。
The unmentioned dimensions are same as the Basic type.

KCP95S(D)G

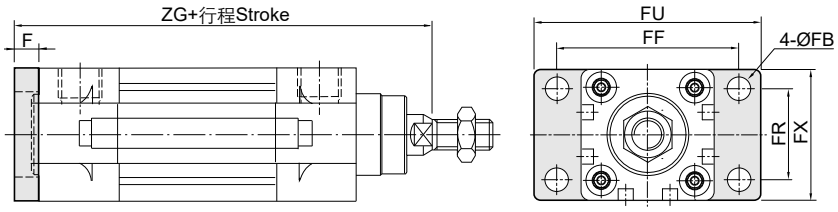

KCP95S(D)C

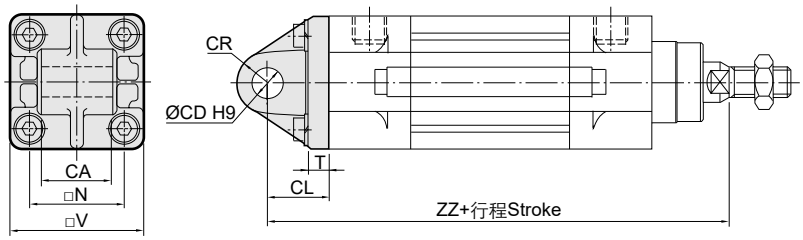

零件号 Part No.	缸径 Bore size	CA	CD	CL	CR	N	T	V	ZZ
FC95-C03	32	$26^{-0.1}_{-0.3}$	10	22	9.5	32.5	10	46	142
FC95-C04	40	$28^{-0.1}_{-0.3}$	12	25	12	38	10	52	160
FC95-C05	50	$32^{-0.1}_{-0.3}$	12	27	12	46.5	12	65	170
FC95-C06	63	$40^{-0.1}_{-0.3}$	16	32	16	56.5	12	75	190
FC95-C08	80	$50^{-0.1}_{-0.3}$	16	36	16	72	16	95	210
FC95-C10	100	$60^{-0.1}_{-0.3}$	20	41	20	89	16	114	230
FC95-C12	125	$70^{-0.1}_{-0.3}$	25	50	25	110	20	134	275

* 未标注尺寸与基本型相同。
The unmentioned dimensions are same as the Basic type.

KCP95S(D)D

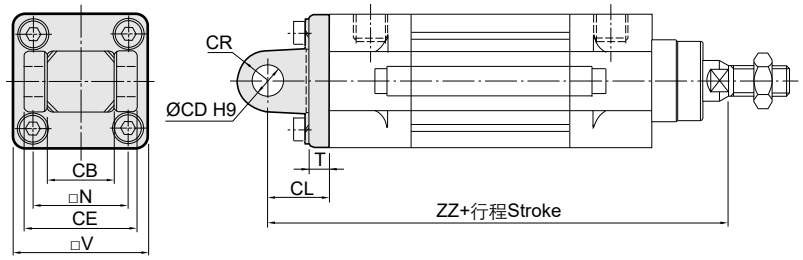

零件号 Part No.	缸径 Bore size	CB	CD	CE	CL	CR	N	T	V	ZZ
FC95-D03	32	$26^{+0.3}_{+0.1}$	10	45	22	9.5	32.5	10	46	142
FC95-D04	40	$28^{+0.3}_{+0.1}$	12	52	25	12	38	10	52	160
FC95-D05	50	$32^{+0.3}_{+0.1}$	12	60	27	12	46.5	12	65	170
FC95-D06	63	$40^{+0.3}_{+0.1}$	16	70	32	16	56.5	12	75	190
FC95-D08	80	$50^{+0.3}_{+0.1}$	16	90	36	16	72	16	95	210
FC95-D10	100	$60^{+0.3}_{+0.1}$	20	110	41	20	89	16	114	230
FC95-D12	125	$70^{+0.3}_{+0.1}$	25	130	50	25	110	20	134	275

* 未标注尺寸与基本型相同。
The unmentioned dimensions are same as the Basic type.

KCP95S(D)E

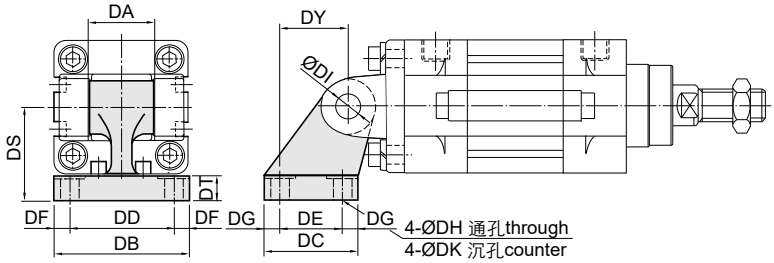

零件号 Part No.	缸径 Bore size	DA	DB	DC	DD	DE	DF	DG	DH	DI	DK	DS	DT	DY
FC95-E03	32	26	50	30	38	18	6	6	6.6	10	-	32	8	21
FC95-E04	40	28	53	34	41	22	6	6	6.6	12	-	36	10	24
FC95-E05	50	32	65	45	50	30	7.5	7.5	9	12	-	45	12	33
FC95-E06	63	40	75	50	52	35	7.5	7.5	9	16	-	50	12	37
FC95-E08	80	50	86	60	66	40	10	10	11	16	18	63	14	47
FC95-E10	100	60	96	70	76	50	10	10	11	20	18	71	15	55
FC95-E12	125	70	124	90	94	60	15	15	14	25	20	90	20	70

* 未标注尺寸与基本型相同。
The unmentioned dimensions are same as the Basic type.

ISO15552标准气缸
ISO15552 Standard Air Cylinder
Series KCP95

外形尺寸图 Dimensions (mm)

* KCP95S(D)T

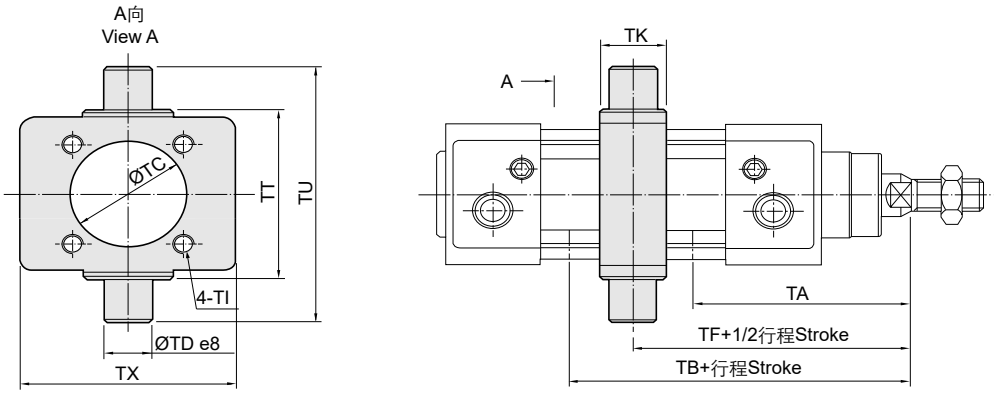

缸径 Bore size	TA	TB	TC	TD	TF	TI	TK	TT	TU	TX
32	73	73	40	12	73	M6	18	50	74	49
40	77	88	49	16	82.5	M6	22	63	95	58
50	86	94	59	16	90	M8	24	75	107	71
63	89.5	105.5	72	20	97.5	M8	28	90	130	87
80	107	113	90	20	110	M10	34	110	150	110
100	116.5	123.5	115	25	120	M10	40	132	182	136
125	130.5	159.5	134	25	145	M12	40	160	212	152

* 中央轴耳安装方式采用圆缸筒+拉杆型式。
The center trunnion mounting applies tie rod and round cylinder barrel.

附件 Accessories

I型单肘节接头 I type single kunckle joint

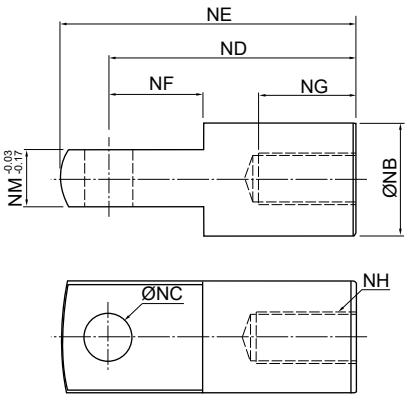

零件号 Part No.	缸径 Bore size	NB	NC	ND	NE	NF	NG	NH	NM
FC95-I03	32	20	10	40	52	15	20	M10x1.25	10
FC95-I04	40	24	12	48	67	24	20	M12x1.25	12
FC95-I05	50, 63	32	16	64	89	32	23	M16x1.5	16
FC95-I08	80, 100	40	20	80	112	40	30	M20x1.5	20
FC95-I12	125	50	30	110	139	51	45	M27x2.0	30

Y型双肘节接头&销子 Y type double kunckle joint & pin

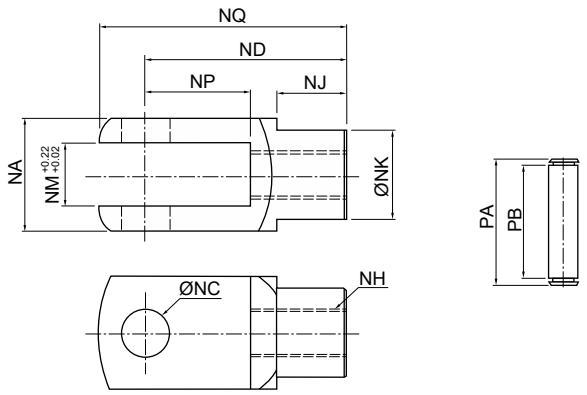

零件号 Part No.	缸径 Bore size	NA	NC	ND	NH	NJ	NK	NM	NP	NQ	PA	PB
FC95-Y03	32	19	10	40	M10x1.25	12	18	10	20	52	26.2	20
FC95-Y04	40	25.4	12	48	M12x1.25	20	23	12	24	62	32.8	26.5
FC95-Y05	50, 63	32	16	64	M16x1.5	22	30	16	32	83	39.3	33
FC95-Y08	80, 100	44.4	20	80	M20x1.5	30	39	20	40	105	53.3	45
FC95-Y12	125	55	30	110	M27x2.0	56	50	30	64	148	64	55.6

ARK

ISO15552标准型气缸
ISO15552 Standard Air Cylinder
Series KC95 (Ø160~Ø320)

规格 Specifications

缸径 Bore size (mm)	160	200	250	320
接管口径 Port size	G3/4		G1	
使用流体 Fluid	过滤压缩空气 Filtered compressed air			
动作形式 Action	双动 Double acting			
保证耐压力 Proof pressure (MPa)	1.35			
使用压力范围 Operating pressure range (MPa)	0.1~0.9			
环境及流体温度 Ambient and fluid temperature	-5~60℃ (未冻结 No freezing)			
活塞速度 Piston speed	50~800 mm/s			
缓冲 Cushion	气缓冲 Air cushion			
行程公差 Stroke tolerance (mm)	~250: $^{+1.0}_{0}$ 251~1000: $^{+1.4}_{0}$ 1001~1500: $^{+1.8}_{0}$ 1501~2000: $^{+2.2}_{0}$			
* 润滑 Lubrication	不需要 Not required			

* 如需要润滑请使用透平 1 号油 ISOVG32。Please use Turbine oil 1st Grade ISOVG32 if necessary.

行程 / 磁性开关 Stroke/ Auto switch

缸径 Bore size (mm)	标准行程 Standard stroke (mm)	最长行程 Max. stroke (mm)	磁性开关 Auto switch	开关固定码 Switch clamp
160, 200	25, 50, 80, 100, 125, 160, 200, 250, 320, 400, 500, 600, 700, 800, 1000, 1200, 1500	2000	D-M9BK	PC+PCD
250, 320				PC+PCF

型号表示方法 How to Order

KC95S D W B 200 - 100

行程 Stroke (mm)

缸径 Bore size (mm)

磁环 Magnet

-	无 None
D	内置磁环 Built-in magnet

活塞杆形式 Rod type

-	单活塞杆 Single rod
W	双活塞杆 Double rod

安装形式 Mounting

B	基本型 Basic
L	脚座 Foot
F	前法兰 Front flange
G	后法兰 Rear flange
C	单 U 型钩 Single clevis
D	双 U 型钩 Double clevis

ISO15552标准型气缸
ISO15552 Standard Air Cylinder
Series KC95

外形尺寸图 Dimensions (mm)

KC95S(D)B

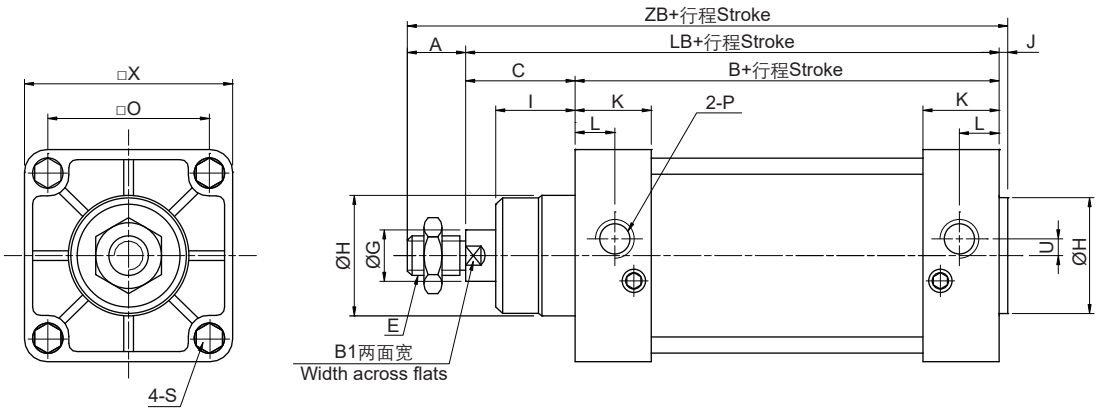

KC95S(D)WB

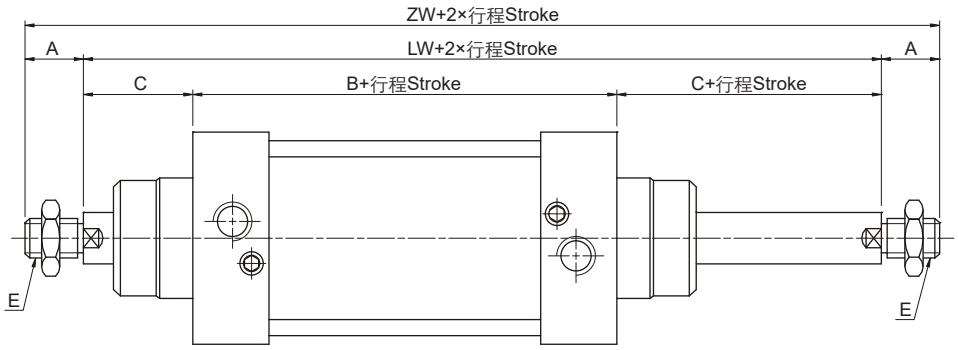

缸径 Bore size	A	B	B1	C	E	G	H	I	J	K	L	LB	LW	O	P	S	U	X	ZB	ZW
160	72	180	36	80	M36x2	40	65	55	6	50	25	260	340	140	G3/4	M16x2.0	15	180	338	484
200	72	180	36	95	M36x2	40	75	65	8	50	25	275	370	175	G3/4	M16x2.0	15	220	355	514
250	84	200	46	105	M42x2	50	90	75	8	60	30	305	410	220	G1	M20x2.5	25	270	397	578
320	96	220	55	120	M48x2	63	110	90	10	65	30	340	460	270	G1	M24x3.0	30	350	446	652

* 双活塞杆基本型未标注尺寸与单活塞杆基本型相同。
The unmentioned dimensions of double rod basic type are same as the single rod basic type.

KC95S(D)L

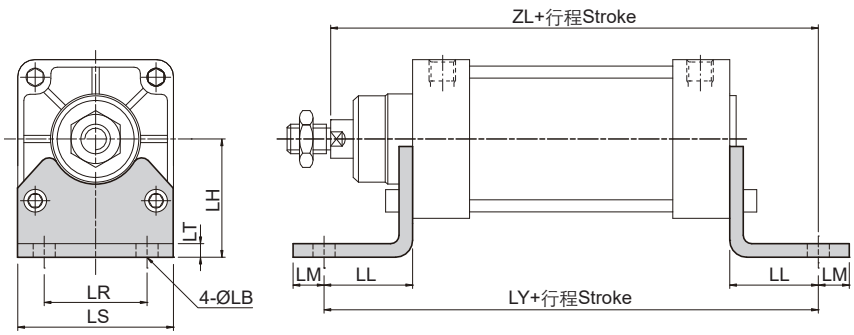

零件号 Part No.	缸径 Bore size	LB	LH	LL	LM	LR	LS	LT	LY	ZL
FC95-L16	160	18	115	60	20	115	180	8	300	320
FC95-L20	200	22	135	70	30	135	220	9	320	345
FC95-L25	250	28	165	75	35	165	270	20	350	380
FC95-L30	320	35	185	85	40	200	340	23	390	425

* 未标注尺寸与基本型相同。The unmentioned dimensions are same as the Basic type.

ISO15552标准型气缸
ISO15552 Standard Air Cylinder
Series KC95

外形尺寸图 Dimensions (mm)

KC95S(D)F

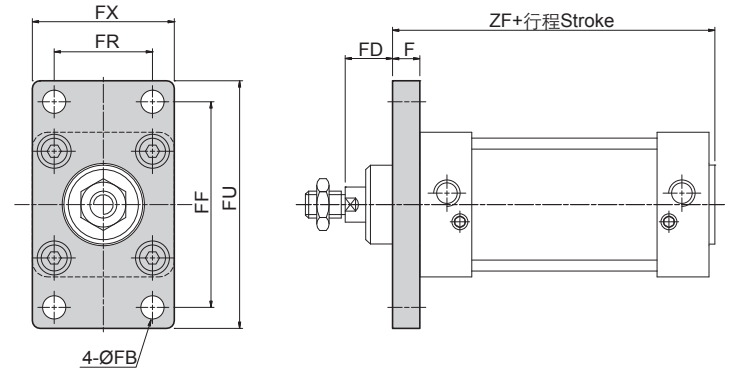

零件号 Part No.	缸径 Bore size	F	FB	FD	FF	FR	FU	FX	ZF	ZG
FC95-F16	160	20	18	60	230	115	280	180	206	280
FC95-F20	200	25	22	70	270	135	320	220	213	300
FC95-F25	250	25	26	80	330	165	390	270	233	330
FC95-F30	320	30	33	90	400	200	470	340	260	370

* 未标注尺寸与基本型相同。
The unmentioned dimensions are same as the Basic type.

KC95S(D)G

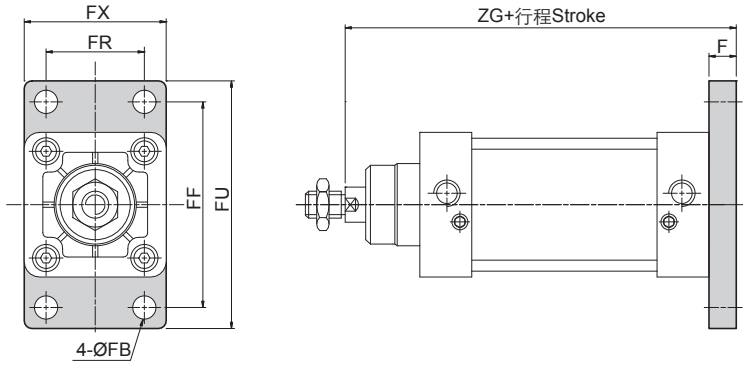

KC95S(D)C

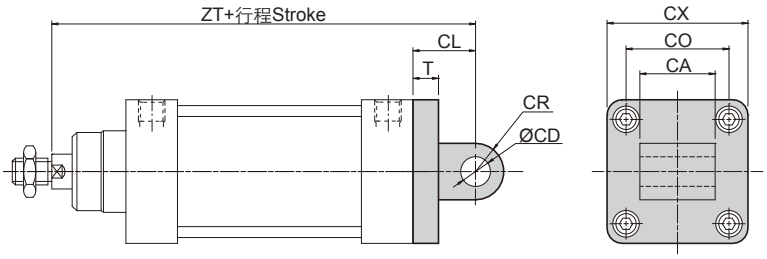

零件号 Part No.	缸径 Bore size	CA	CD	CL	CO	CR	CX	T	ZT
FC95-C16	160	$90^{-0.1}_{-0.3}$	30	55	140	25	180	20	315
FC95-C20	200	$90^{-0.1}_{-0.3}$	30	60	175	25	220	25	335
FC95-C25	250	$110^{-0.1}_{-0.3}$	40	70	220	40	270	23	375
FC95-C30	320	$120^{-0.1}_{-0.3}$	45	80	270	45	340	28	420

* 未标注尺寸与基本型相同。
The unmentioned dimensions are same as the Basic type.

KC95S(D)D

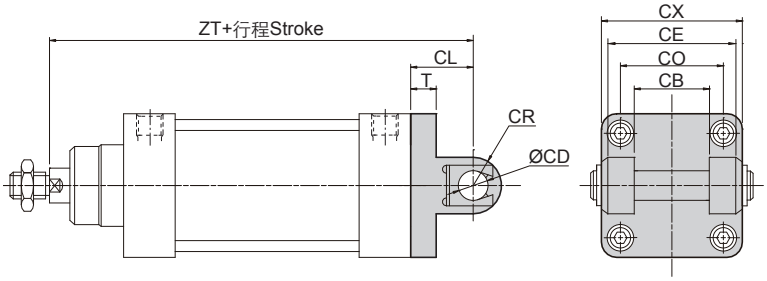

零件号 Part No.	缸径 Bore size	CB	CD	CL	CE	CO	CR	CX	T	ZT
FC95-D16	160	$90^{+0.3}_{+0.1}$	30	55	170	140	25	180	20	315
FC95-D20	200	$90^{+0.3}_{+0.1}$	30	60	170	175	25	220	25	335
FC95-D25	250	$110^{+0.3}_{+0.1}$	40	70	200	220	40	270	23	375
FC95-D30	320	$120^{+0.3}_{+0.1}$	45	80	220	270	45	340	28	420

* 未标注尺寸与基本型相同。
The unmentioned dimensions are same as the Basic type.

ARK

ISO15552标准气缸
ISO15552 Standard Air Cylinder
Series SI (Ø32~Ø200)

规格 Specifications

缸径 Bore size (mm)	32	40	50	63	80	100	125	160	200
接管口径 Port size Rc(PT)	1/8	1/4		3/8		1/2		3/4	
使用流体 Fluid	过滤压缩空气 Filtered compressed air								
动作形式 Action	双动 Double acting								
保证耐压力 Proof pressure (MPa)	1.5								
使用压力范围 Operating pressure range (MPa)	0.1~1.0								
环境及流体温度 Ambient and fluid temperature	-5~60℃ (未冻结 No freezing)								
活塞速度 Piston speed (mm/s)	30~800						30~500		
缓冲 Cushion	可调缓冲 Adjustable cushion								
行程公差 Stroke tolerance (mm)	0~250: $^{+1.0}_{0}$ 251~1000: $^{+1.4}_{0}$ 1001~1500: $^{+1.8}_{0}$								
* 润滑 Lubrication	不需要 Not required								

* 如需要润滑请使用透平 1 号油 ISOVG32。Please use Turbine oil 1st Grade ISOVG32 if necessary.

行程 / 磁性开关 Stroke/ Auto switch

缸径 Bore size (mm)	标准行程 Standard stroke (mm)	最长行程 Max. stroke (mm)	容许行程 Permissible stroke (mm)	磁性开关 Auto switch	开关固定码 Switch clamp
32	25, 50, 75, 80, 100, 125, 150, 160, 175, 200, 250, 300, 350, 400, 450, 500	1000	1800	D-M9BK	PC+PO-1
40	25, 50, 75, 80, 100, 125, 150, 160, 175, 200, 250, 300, 350, 400, 450, 500, 600, 700, 800	1200			
50	25, 50, 75, 80, 100, 125, 150, 160, 175, 200, 250, 300, 350, 400, 450, 500, 600, 700, 800, 900, 1000				PC+PO-2
63		1500			
80					PC+PO-3
100					
125					PF7-5
160, 200			2000		PF7-6

* 非标行程可定制。Nonstandard stroke can be customized.

型号表示方法 How to Order

SI [ ] 63 - 100 - 30 S FA

类型 Type

-	基本型 Basic
D	双活塞杆 Double rod
J	双活塞杆行程可调 Double rod with adjustable stroke

缸径 Bore size (mm)

行程 Stroke (mm)

可调行程 Adjustable stroke (SIJ)

10	10 mm
20	20 mm
30	30 mm
40	40 mm
50	50 mm
75	75 mm
100	100 mm

磁环 Magnet

-	无 None
S	内置磁环 Built-in magnet

安装形式 Mounting

-	基本型 Basic		SI SID SIJ
LB	脚座 Foot		
FA	前法兰 Front flange		
FB	后法兰 Rear flange		SI
CA	单 U 型钩 Single clevis		
CB	双 U 型钩 Double clevis		
CR	双 U 型钩接座 Double clevis bracket	与 CB 配合使用 Use with CB	
FTC	前轴耳 Front trunnion	与 TCM1 或 TCM2 配合使用 Use with TCM1 or TCM2	SI SID SIJ
TC	中央轴耳 Center trunnion		

ISO15552标准气缸
ISO15552 Standard Air Cylinder
Series SI

外形尺寸图 Dimensions (mm)

SI

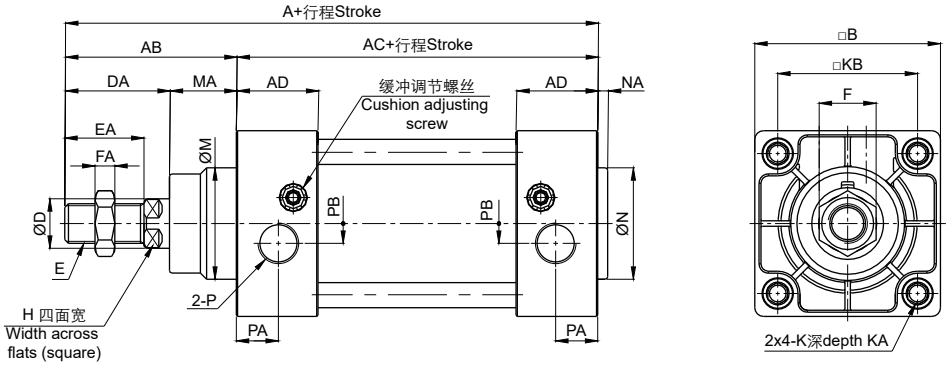

SID

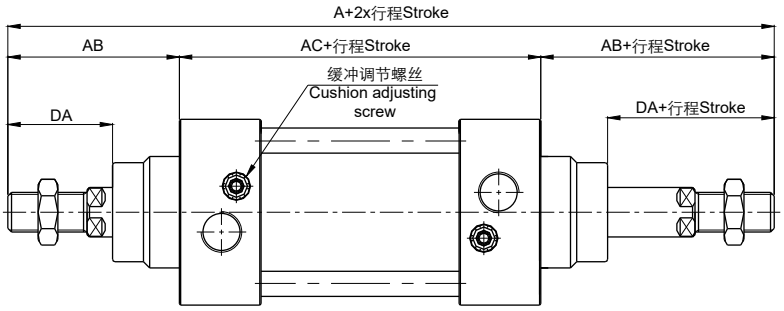

SIJ

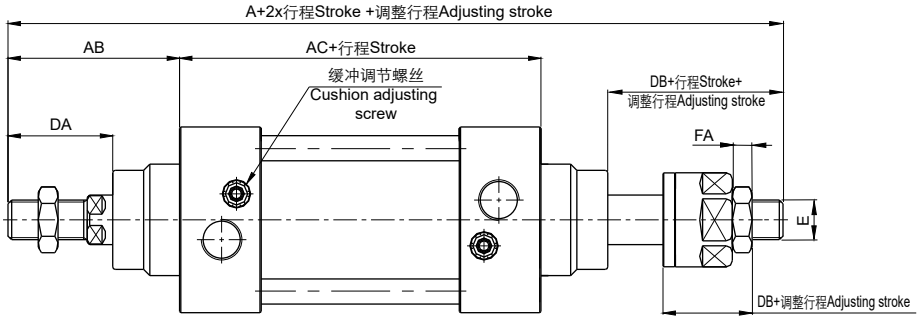

缸径 Bore size	A			AB	AC	AD	B	D	DA	DB	E	EA	F	FA	H	*K	*KA	KB	M	MA	N	NA	P	PA	PB
	SI	SID	SIJ																						
32	142	190	188	48	94	27.5	47	12	29	27	M10x1.25	22	17	6	10	M6(M5)	16(14)	32.5	30	19	30	3	1/8	13	5.5
40	159	213	208	54	105	32	53	16	33	28	M12x1.25	24	17	7	13	M6(M5)	16	38	35	21	35	3.5	1/4	17	6
50	175	244	231	69	106	31	65	20	42	29	M16x1.5	32	23	8	17	M8(M6)	16	46.5	40	27	40	3.5	1/4	15.5	7.5
63	190	259	246	69	121	33	75	20	42	29	M16x1.5	32	23	8	17	M8(M6)	16	56.5	45	27	45	4	3/8	16.5	7.5
80	214	300	282.5	86	128	33	95	25	53	35.5	M20x1.5	40	26	10	22	M10(M8)	17(16)	72	45	33	45	4	3/8	16.5	9
100	229	320	300.5	91	138	37	115	25	55	35.5	M20x1.5	40	26	10	22	M10(M8)	17(16)	89	55	36	55	4	1/2	18.5	9.5
125	279	398	366.5	119	160	46	140	32	74	42.5	M27x2.0	54	41	13.5	27	M12	20	110	60	45	60	4	1/2	23	14
160	332	484	458	152	180	50	180	40	94	68	M36x2.0	72	55	18	36	M16	24	140	65	58	65	4	3/4	25	15
200	347	514	482	167	180	50	220	40	100	68	M36x2.0	72	55	18	36	M16	24	175	75	67	75	5	3/4	25	15

* ( ) 为如果使用中央轴耳的尺寸。( ) shows dimensions if center trunnion used.

ISO15552标准气缸
ISO15552 Standard Air Cylinder
Series SI

外形尺寸图 Dimensions (mm)

脚座Foot LB

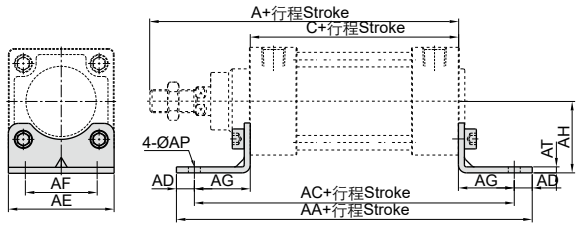

零件号 Part No.	缸径 Bore size	A	C	AA	AC	AD	AE	AF	AG	AH	AP	AT
F-SI32LB	32	142	94	158	142	8	47	32	24	32	7	3
F-SI40LB	40	159	105	179	161	9	53	36	28	36	9	3
F-SI50LB	50	175	106	190	170	10	65	45	32	45	9	3
F-SI63LB	63	190	121	209	185	12	75	50	32	50	9	3
F-SI80LB	80	214	128	248	210	19	95	63	41	63	12.5	4
F-SI100LB	100	229	138	266	220	19	115	75	41	71	14.5	4
F-SI125LB	125	279	160	290	250	20	140	90	45	90	16.5	8
F-SI160LB	160	332	180	340	300	20	180	115	60	115	18.5	8
F-SI200LB	200	347	180	380	320	30	220	135	70	135	24	9

法兰Flange FA/FB

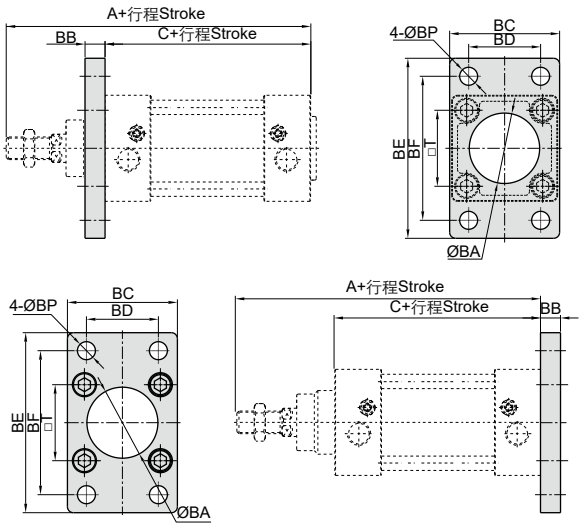

零件号 Part No.	缸径 Bore size	A	C	BA	BB	BC	BD	BE	BF	BP	T
F-SI32FA	32	142	94	30.5	10	47	32	80	64	7	32.5
F-SI40FA	40	159	105	35.5	10	53	36	90	72	9	38
F-SI50FA	50	175	106	40.5	12	65	45	108	90	9	46.5
F-SI63FA	63	190	121	45.5	12	75	50	118	100	9	56.5
F-SI80FA	80	214	128	45.5	16	95	63	150	126	12.5	72
F-SI100FA	100	229	138	55.5	16	115	75	176	150	14.5	89
F-SI125FA	125	279	160	60.5	20	139	90	218	180	16.5	110
F-SI160FA	160	332	180	65.5	20	180	115	280	230	18.5	140
F-SI200FA	200	347	180	75.5	25	220	135	320	270	24	175

单U型钩Single clevis CA

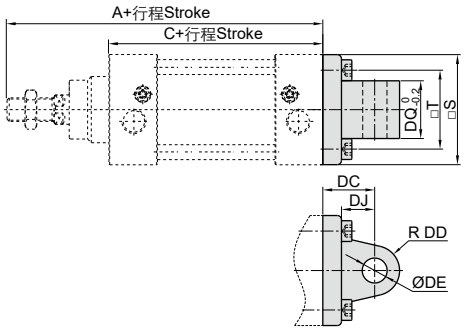

零件号 Part No.	缸径 Bore size	A	C	DC	DD	DE	DJ	DQ	S	T
F-SI32CA	32	142	94	22	9	10	13	25.8	47	32.5
F-SI40CA	40	159	105	25	10.5	12	16	27.8	52	38
F-SI50CA	50	175	106	27	11	12	17	31.7	64	46.5
F-SI63CA	63	190	121	32	13.5	16	22	39.7	74	56.5
F-SI80CA	80	214	128	36	14.5	16	22	49.7	94	72
F-SI100CA	100	229	138	41	17	20	27	59.7	113	89
F-SI125CA	125	279	160	50	22	25	33	69.7	139	110
F-SI160CA	160	332	180	55	30	30	35.5	89.7	180	140
F-SI200CA	200	347	180	60	30	30	37	89.7	220	175

双U型钩Double clevis CB

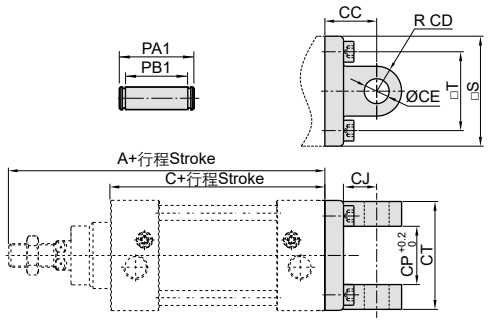

零件号 Part No.	缸径 Bore size	A	C	CC	CD	CE	CJ	CP	CT	PA1	PB1	S	T
F-SI32CB	32	142	94	22	9	10	13	26	45	51	45.5	47	32.5
F-SI40CB	40	159	105	25	10.5	12	16	28	52	59	52.5	52	38
F-SI50CB	50	175	106	27	11	12	17	32	60	67	60.5	64	46.5
F-SI63CB	63	190	121	32	13	16	22	40	70	77	70.5	74	56.5
F-SI80CB	80	214	128	36	14	16	22	50	90	97	90.5	94	72
F-SI100CB	100	229	138	41	17.5	20	27	60	110	119	110.5	113	89
F-SI125CB	125	279	160	50	21.5	25	33	70	130	139	130.5	139	110
F-SI160CB	160	332	180	55	30	30	35.5	90	170	181	170.5	180	140
F-SI200CB	200	347	180	60	30	30	36	90	170	181	170.5	220	175

ISO15552标准气缸
ISO15552 Standard Air Cylinder
Series SI

外形尺寸图 Dimensions (mm)

双U型钩接座Double clevis bracket CR

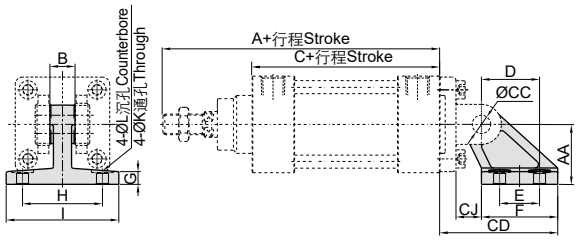

零件号 Part No.	缸径 Bore size	A	AA	B	C	CC	CD	CJ	D	E	F	G	H	I	K	L
F-SI32CR	32	142	32	26	94	10	50	10	21	18	31	8	38	51	6.6	-
F-SI40CR	40	159	36	28	105	12	56	12	24	22	35	10	41	54	6.6	-
F-SI50CR	50	175	45	32	106	12	68	13	33	30	45	12	50	65	9	-
F-SI63CR	63	190	50	40	121	16	77	17	37	35	50	12	52	67	9	-
F-SI80CR	80	214	63	50	128	16	93	19	47	40	60	14	66	86	11	18
F-SI100CR	100	229	71	60	138	20	106	22	55	50	70	15	76	96	11	18
F-SI125CR	125	279	90	70	160	25	135	26	70	60	90	20	94	124	14	20
F-SI160CR	160	332	115	90	180	30	171	25	97	88	126	25	118	156	14	20
F-SI200CR	200	347	135	90	180	30	185	31	105	90	130	30	122	162	18	26

前轴耳Front trunnion FTC

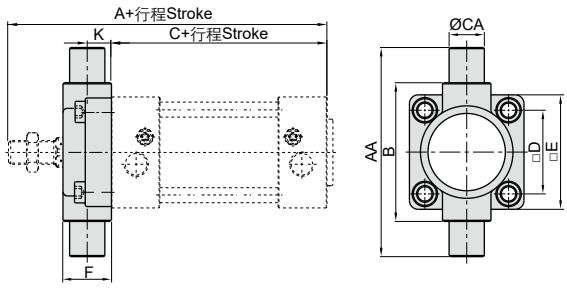

零件号 Part No.	缸径 Bore size	A	AA	B	C	CA	D	E	F	K
F-SI32FTC	32	142	74	50	94	12	32.5	46	19	10
F-SI40FTC	40	159	95	63	105	16	38	52	21	10
F-SI50FTC	50	175	107	75	106	16	46.5	64	26	12
F-SI63FTC	63	190	130	90	121	20	56.5	74	28	12
F-SI80FTC	80	214	150	110	128	20	72	94	31	16
F-SI100FTC	100	229	182	132	138	25	89	114	35	16
F-SI125FTC	125	279	210	160	160	25	110	139	43	20
F-SI160FTC	160	332	264	200	180	32	140	179	56	20
F-SI200FTC	200	347	314	250	180	32	175	218	64	20

中央轴耳Center trunnion TC

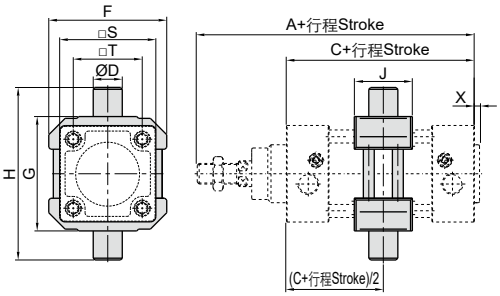

零件号 Part No.	缸径 Bore size	A	C	D	F	G	H	J	S	X	T
F-SI32TC	32	142	94	12	52	50	74	22	47	3	32.5
F-SI40TC	40	159	105	16	65	63	95	28	53	3.5	38
F-SI50TC	50	175	106	16	75	75	107	28	65	3.5	46.5
F-SI63TC	63	190	121	20	90	90	130	30	75	4	56.5
F-SI80TC	80	214	128	20	112	110	150	32	95	4	72
F-SI100TC	100	229	138	25	135	132	182	38	115	4	89
F-SI125TC	125	279	160	25	170	160	210	40	140	4	110
F-SI160TC	160	332	180	32	210	200	264	50	180	4	140
F-SI200TC	200	347	180	32	255	250	314	50	220	5	175

轴耳支架Trunnion bracket TCM1

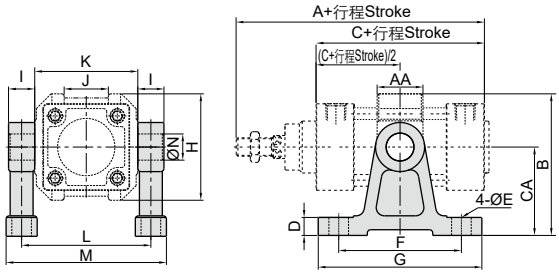

零件号 Part No.	缸径 Bore size	A	AA	B	C	CA	D	E	F	G	H	I	J	K	L	M	N
F-SI32TCM1	32	142	22	66	94	40	11	9	60	80	52	12	20	50	62	77	12
F-SI40TCM1	40	159	28	86.5	105	54	11	12	75	100	65	16	27	63	79	98	16
F-SI40TCM1	50	175	28	91.5	106	54	11	12	75	100	75	16	31	75	91	110	16
F-SI63TCM1	63	190	30	115	121	70	11	12	85	110	90	20	42	90	110	133	20
F-SI63TCM1	80	214	32	126	128	70	11	12	85	110	112	20	54	110	130	153	20
F-SI125TCM1	100	229	38	157.5	138	90	19	18	115	155	135	25	68	132	157	185	25
F-SI125TCM1	125	279	40	175	160	90	19	18	115	155	170	25	80	160	185	213	25
F-SI160TCM1	160	332	50	215	180	110	24	22	140	190	210	32	100	200	232	267	32
F-SI200TCM1	200	347	50	262.5	180	135	27	22	150	200	255	32	125	250	282	317	32

轴耳支架Trunnion bracket TCM2

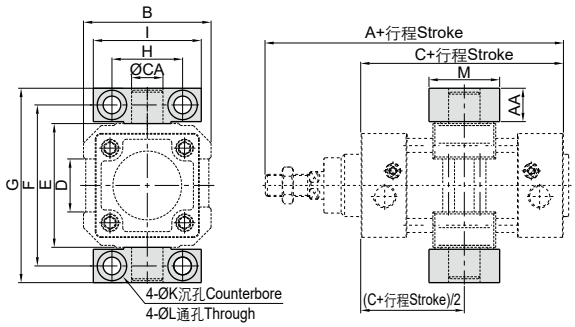

零件号 Part No.	缸径 Bore size	A	AA	B	C	CA	D	E	F	G	H	I	K	L	M
F-SI32TCM2	32	142	14	52	94	12	20	50	66	80	32	46	11	7	30
F-SI40TCM2	40	159	17	65	105	16	27	63	82	99	36	55	15	9	36
F-SI40TCM2	50	175	17	75	106	16	31	75	94	111	36	55	15	9	36
F-SI63TCM2	63	190	20.5	90	121	20	42	90	113.5	134	42	65	18	11	40
F-SI63TCM2	80	214	20.5	112	128	20	54	110	133.5	154	42	65	18	11	40
F-SI125TCM2	100	229	24.5	135	138	25	68	132	159.5	184	50	75	20	14	50
F-SI125TCM2	125	279	24.5	170	160	25	80	160	187.5	212	50	75	20	14	50
F-SI160TCM2	160	332	30	210	180	32	100	200	234	264	60	92	26	18	60
F-SI160TCM2	200	347	30	255	180	32	125	250	284	314	60	92	26	18	60

ARK

ISO15552标准带锁气缸
ISO15552 Standard Lock Air Cylinder
Series SIL (Ø40~Ø200)

规格 Specifications

缸径 Bore size (mm)	40	50	63	80	100	125	160	200
接管口径 Port size Rc (PT)	1/4		3/8		1/2		3/4	
使用流体 Fluid	过滤压缩空气 Filtered compressed air							
动作形式 Action	双动 Double acting							
保证耐压力 Proof pressure (MPa)	1.5							
使用压力范围 Operating pressure range (MPa)	0.1~1.0							
环境及流体温度 Ambient and fluid temperature	-5~60℃ (未冻结 No freezing)							
活塞速度 Piston speed (mm/s)	30~800						30~500	
缓冲 Cushion	可调缓冲 Adjustable cushion							
行程公差 Stroke tolerance (mm)	0~250: $^{+1.0}_{0}$ 251~1000: $^{+1.4}_{0}$ 1001~1500: $^{+1.8}_{0}$							
* 润滑 Lubrication	不需要 Not required							

* 如需要润滑请使用透平 1 号油 ISOVG32。Please use Turbine oil 1st Grade ISOVG32 if necessary.

行程 / 磁性开关 Stroke/ Auto switch

缸径 Bore size (mm)	标准行程 Standard stroke (mm)	最长行程 Max. stroke (mm)	容许行程 Permissible stroke (mm)	磁性开关 Auto switch	开关固定码 Switch clamp
40	25, 50, 75, 80, 100, 125, 150, 160, 175, 200, 250, 300, 350, 400, 450, 500, 600, 700, 800	1200	1800	D-M9BK	PC+PO-1
50	25, 50, 75, 80, 100, 125, 150, 160, 175, 200, 250, 300, 350, 400, 450, 500, 600, 700, 800, 900, 1000				PC+PO-2
63		1500			
80, 100					PC+PO-3
125					PF7-5
160, 200			2000		PF7-6

* 非标行程可定制。Nonstandard stroke can be customized.

型号表示方法 How to Order

SIL **B** - **80** - **100** - **S** **FA**

锁位置 Lock position

B	后盖带锁 Lock at rear cover
F	前盖带锁 Lock at front cover

缸径 Bore size (mm)

行程 Stroke (mm)

磁环 Magnet

-	无 None
S	内置磁环 Built-in magnet

安装形式 Mounting

-	基本型 Basic		SILB SILF 与 SI 系列通用 Common use with Series SI
LB	脚座 Foot		
FA	前法兰 Front flange		
FB	后法兰 Rear flange		
CA	单 U 型钩 Single clevis		
CB	双 U 型钩 Double clevis		
CR	双 U 型钩接座 Double clevis bracket	与 CB 配合使用 Use with CB	
FTC	前轴耳 Front trunnion	与 TCM1 或 TCM2 配合使用 Use with TCM1 or TCM2	
TC	中央轴耳 Center trunnion		

ISO15552标准带锁气缸
ISO15552 Standard Lock Air Cylinder
Series SIL

外形尺寸图 Dimensions (mm)

SILF

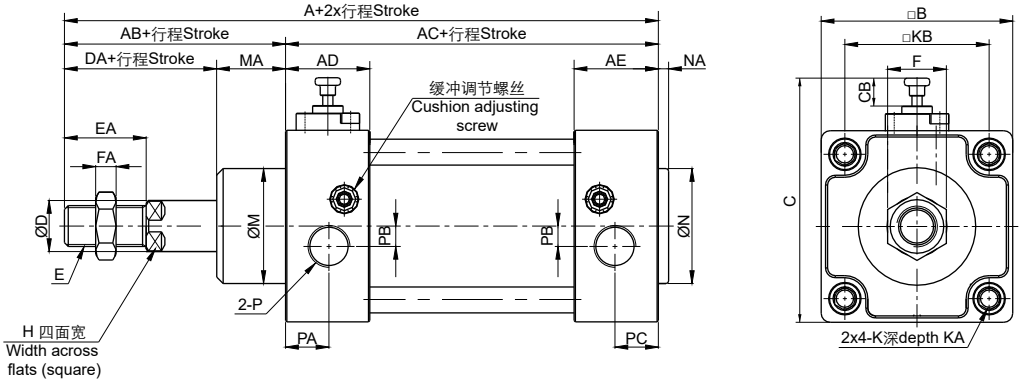

SILB

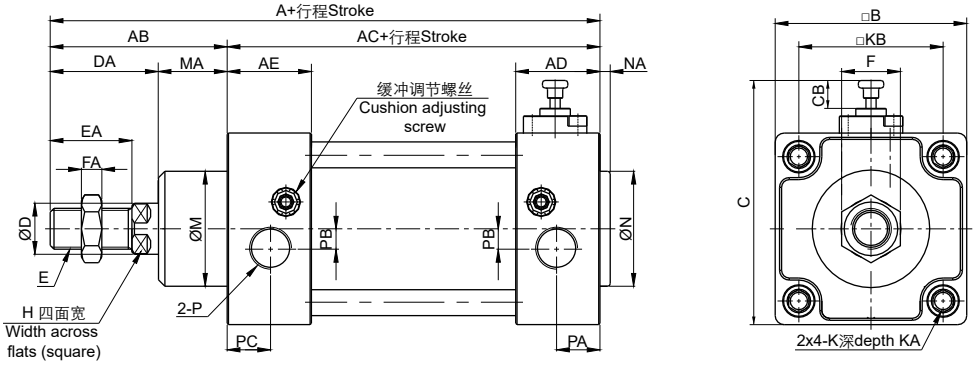

缸径 Bore size	A	AB	AC	AD	AE	B	C	CB	D	DA	E	EA	F	FA	H	*K	*KA	KB	M	MA	N	NA	P	PA	PB	PC
40	159	54	105	32	32	53	74	10	16	32	M12x1.25	24	17	7	13	M6(M5)	16	38	35	22	35	3.5	1/4	18	6	16
50	175	69	106	31	31	65	86	10	20	42	M16x1.5	32	23	8	17	M8(M6)	16	46.5	40	27	40	3.5	1/4	18.5	8.5	15.5
63	190	69	121	33	33	75	96	8	20	40	M16x1.5	32	23	8	17	M8(M6)	16	56.5	45	29	45	4	3/8	18	7.5	16.5
80	220	86	134	39	33	95	117	8	25	53	M20x1.5	40	26	10	22	M10(M8)	17(16)	72	45	33	45	4	3/8	22.5	11	16.5
100	231	91	140	39	37	115	137	8	25	55	M20x1.5	40	26	10	22	M10(M8)	17(16)	89	55	36	55	4	1/2	22.5	13.5	18.5
125	279	119	160	46	46	140	172.5	18.5	32	74	M27x2.0	54	41	13.5	27	M12	20	110	60	45	60	4	1/2	23	14	23
160	332	152	180	50	50	180	212.5	18.5	40	94	M36x2.0	72	55	18	36	M16	24	140	65	58	65	4	3/4	25	15	25
200	347	167	180	50	50	220	252.5	18.5	40	100	M36x2.0	72	55	18	36	M16	24	175	75	67	75	5	3/4	25	15	25

* ( ) 为如果使用中央轴耳的尺寸。( ) shows dimensions if center trunnion used.

ARK

薄型气缸
Compact Air Cylinder
Series KCQ2 (Ø12~Ø100)

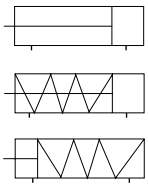

规格 Specifications

缸径 Bore size (mm)	12	16	20	25	32	40	50	63	80	100
接管口径 Port size Rc(PT)	M5x0.8				1/8		1/4		3/8	
使用流体 Fluid	过滤压缩空气 Filtered compressed air									
动作形式 Action	双动 / 单动 Double acting/ Single acting									
保证耐压力 Proof pressure (MPa)	1.5									
使用压力范围 Operating pressure range (MPa)	0.05~1.0									
环境及流体温度 Ambient and fluid temperature	-5~60℃ (未冻结 No freezing)									
活塞速度 Piston speed	50~500 mm/s									
缓冲 Cushion	橡胶缓冲 Rubber bumper									
行程公差 Stroke tolerance (mm)	$^{+1.0}_{0}$									
* 润滑 Lubrication	不需要 Not required									

* 如需要润滑请使用透平 1 号油 ISOVG32。Please use Turbine oil 1st Grade ISOVG32 if necessary.

行程 / 磁性开关 Stroke/ Auto switch

缸径 Bore size (mm)	标准行程 Standard stroke (mm)	* 中间行程范围 Middle stroke range (mm)	磁性开关 / 轨道安装 Auto switch/ Rail mounting
12, 16	5, 10, 15, 20, 25, 30	1~29	D-M9BK
20, 25	5, 10, 15, 20, 25, 30, 35, 40, 45, 50	1~49	
32, 40	5, 10, 15, 20, 25, 30, 35, 40, 45, 50, 75, 100	1~99	
50, 63, 80, 100	10, 15, 20, 25, 30, 35, 40, 45, 50, 75, 100		

* 中间行程的最小间隔为 1mm, 通过在比中间行程长的标准行程缸筒内安装隔板的方式实现。
Middle stroke interval minimum 1 mm is implemented by using spacer in barrel of standard stroke.

型号表示方法 How to Order

KC [D] Q2 [W] [A] [32] - [30] [D] [M]

磁环 Magnet

-	无 None
D	内置磁环 Built-in magnet

活塞杆形式 Rod type

-	单活塞杆 Single rod
W	双活塞杆 Double rod

安装形式 Mounting

A	基本型 (两端沉孔和内螺纹以及通孔) Basic (Both ends tapped with female thread and through-holes)
L	脚座 Foot
F	前法兰 Front flange
G	后法兰 Rear flange
D	双 U 型钩 Double clevis

缸径 Bore size (mm)

行程 Stroke (mm)

动作形式 Action

D	双动 Double acting
*S	单动 (弹簧压回) Single acting (Spring return)
*T	单动 (弹簧压出) Single acting (Spring extend)

杆端螺纹 Rod end thread

-	杆端内螺纹 Rod end female thread
M	杆端外螺纹 Rod end male thread

薄型气缸
Compact Air Cylinder
Series KCQ2

外形尺寸图 Dimensions (mm)

KC(D)Q2A

Ø12~Ø25

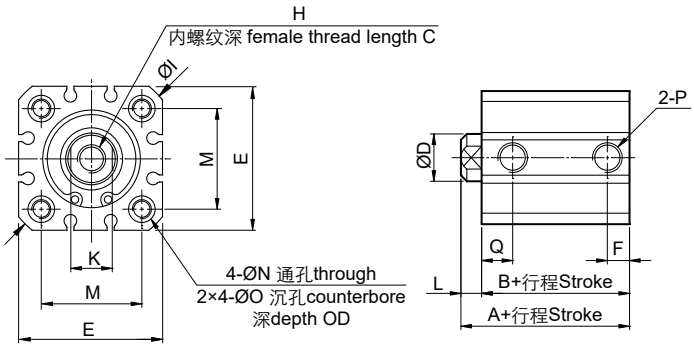

杆端外螺纹
Rod end male thread

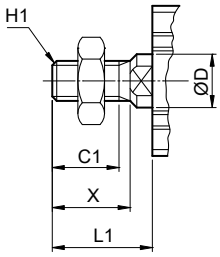

Ø32~Ø100

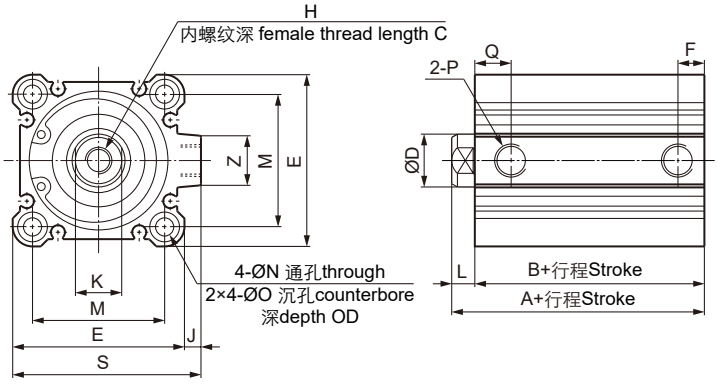

4-通孔和两端沉孔加内螺纹
4-though hole and both ends
tapper with female thread

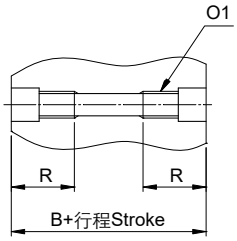

缸径 Bore size	行程范围 Stroke range	KCQ2A		KCDQ2A		C	C1	D	E	F	H	H1	I	J	K	L	L1	M	N	O	O1	OD	P	Q	R	S	X	Z
		A	B	A	B																							
12	5~30	20.5	17	31.5	28	6	9	6	25	4.5	M3x0.5	M5x0.8	32	-	5	3.5	14	15.5	3.5	6.5	M4x0.7	3.5	M5x0.8	7.5	9.5	-	10.5	-
16	5~30	22	18.5	34	30.5	8	10	8	29	5	M4x0.7	M6x1.0	38	-	6	3.5	15.5	20	3.5	6.5	M4x0.7	3.5	M5x0.8	9.5	9.5	-	12	-
20	5~50	24	19.5	36	31.5	7	12	10	36	5.5	M5x0.8	M8x1.25	47	-	8	4.5	18.5	25.5	5.5	9	M6x1.0	7	M5x0.8	9.5	17	-	14	-
25	5~50	27.5	22.5	37.5	32.5	12	15.5	12	40	5.5	M6x1.0	M10x1.25	52	-	10	5	22.5	28	5.5	9	M6x1.0	7	M5x0.8	11	17	-	17.5	-
32	5	30	23	40	33	13	20.5	16	45	5.5	M8x1.25	M14x1.5	-	4.5	14	7	28.5	34	5.5	9	M6x1.0	7	*1/8	11.5	17	49.5	23.5	13
	10~50									7.5														10.5				
	75, 100	40	33																									
40	5~50	36.5	29.5	46.5	39.5	13	20.5	16	52	8.5	M8x1.25	M14x1.5	-	5	14	7	28.5	40	5.5	9	M6x1.0	7	1/8	12	17	57	23.5	14
	75, 100	46.5	39.5																									
50	10~50	38.5	30.5	48.5	40.5	15	26	20	64	10.5	M10x1.5	M18x1.5	-	7	18	8	33.5	50	6.5	11	M8x1.25	8	1/4	11.5	22	71	28.5	16
	75, 100	48.5	40.5																									
63	10~50	44	36	54	46	15	26	20	77	10	M10x1.5	M18x1.5	-	7	18	8	33.5	60	9	14	M10x1.5	10.5	1/4	15.5	28.5	84	28.5	19
	75, 100	54	46																									
80	10~50	53.5	43.5	63.5	53.5	21	32.5	25	98	14	M16x2.0	M22x1.5	-	6	22	10	43.5	77	11	17.5	M12x1.75	13.5	3/8	16	35.5	104	35.5	22
	75, 100	63.5	53.5																									
100	10~50	65	53	75	63	27	32.5	30	117	17.5	M20x2.5	M26x1.5	-	6.5	27	12	43.5	94	11	17.5	M12x1.75	13.5	3/8	20	35.5	123.5	35.5	26
	75, 100	75	63																									

* 型号 KCQ2A32-5 (无磁环，缸径 32mm，行程 5mm) 的接管口径为 M5x0.8。
Port size of KCQ2A32-5 (32 mm bore size and 5 mm stroke length without magnet) is M5x0.8.

薄型气缸
Compact Air Cylinder
Series KCQ2

外形尺寸图 Dimensions (mm)

KC(D)Q2WA

Ø12~Ø25

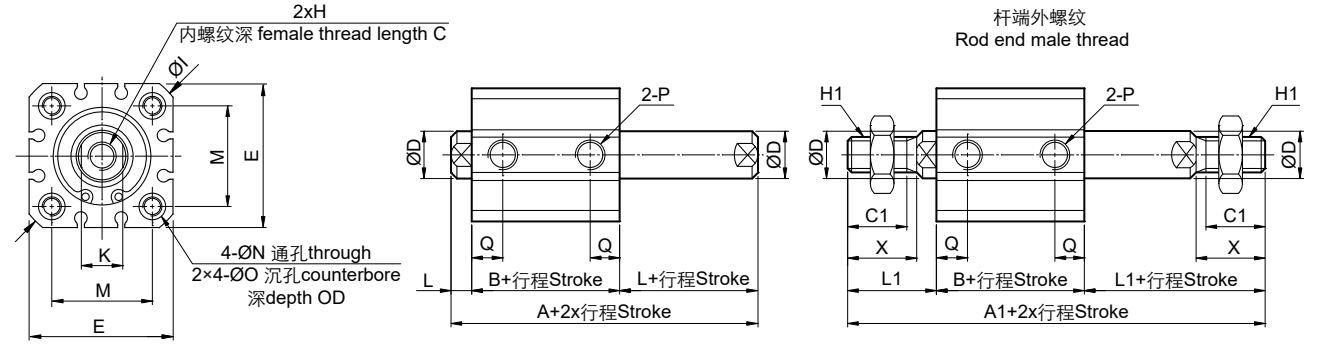

Ø32~Ø100

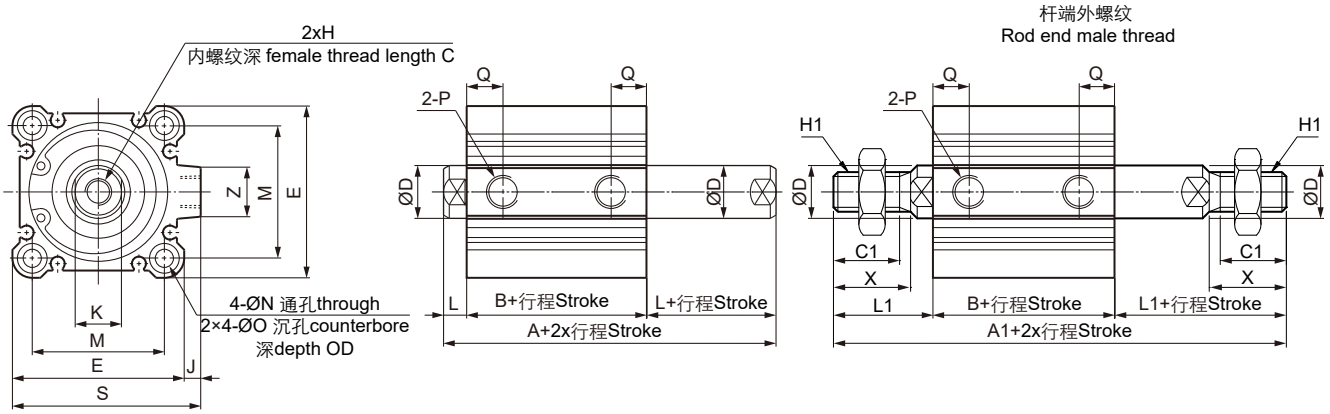

缸径 Bore size	行程范围 Stroke range	KCQ2WA			KCDQ2WA			C	C1	D	E	H	H1	I	J	K	L	L1	M	N	O	OD	P	Q	S	X	Z
		A	A1	B	A	A1	B																				
12	5~30	32.2	53.2	25.2	39.4	60.4	32.4	6	9	6	25	M3x0.5	M5x0.8	32	-	5	3.5	14	15.5	3.5	6.5	3.5	M5x0.8	7.5	-	10.5	-
16	5~30	33	57	26	43	67	36	8	10	8	29	M4x0.7	M6x1.0	38	-	6	3.5	15.5	20	3.5	6.5	3.5	M5x0.8	9.5	-	12	-
20	5~50	35	63	26	47	75	38	7	12	10	36	M5x0.8	M8x1.25	47	-	8	4.5	18.5	25.5	5.5	9	7	M5x0.8	9.5	-	14	-
25	5~50	39	74	29	49	84	39	12	15.5	12	40	M6x1.0	M10x1.25	52	-	10	5	22.5	28	5.5	7	7	M5x0.8	11	-	17.5	-
32	5	44.5	87.5	30.5	54.5	97.5	40.5	13	20.5	16	45	M8x1.25	M14x1.5	-	4.5	14	7	28.5	34	5.5	9	7	*1) 1/8	11.5	49.5	23.5	13
	10~50																							37			
	75, 100	54.5	97.5	40.5																							
40	5~50	54	97	40	64	107	50	13	20.5	16	52	M8x1.25	M14x1.5	-	5	14	7	28.5	40	5.5	9	7	1/8	12	57	23.5	14
	75, 100	64	107	50																							
50	10~50	56.5	107.5	40.5	66.5	117.5	50.5	15	26	20	64	M10x1.5	M18x1.5	-	7	18	8	33.5	50	6.5	11	8	1/4	11.5	71	28.5	16
	75, 100	66.5	117.5	50.5																							
63	10~50	58	109	42	68	119	52	15	26	20	77	M10x1.5	M18x1.5	-	7	18	8	33.5	60	9	14	10.5	1/4	15.5	84	28.5	19
	75, 100	68	119	52																							
80	10~50	71	138	51	81	148	61	21	32.5	25	98	M16x2	M22x1.5	-	6	22	10	43.5	77	11	17.5	1.5	3/8	16	104	35.5	22
	75, 100	81	148	61																							
100	10~50	84.5	147.5	60.5	94.5	157.5	70.5	27	32.5	30	117	M20x2.5	M26x1.5	-	6.5	27	12	43.5	94	11	17.5	13.5	3/8	20	123.5	35.5	26
	75, 100	94.5	157.5	70.5																							

* 1) 型号 KCQ2A32-5 (无磁环，缸径 32mm，行程 5mm) 的接管口径为 M5x0.8。
Port size of KCQ2A32-5 (32 mm bore size and 5 mm stroke length without magnet) is M5x0.8.
2) 未标注尺寸与单活塞杆基本型相同。The unmentioned dimensions are same as the single rod basic type.

薄型气缸
Compact Air Cylinder
Series KCQ2

外形尺寸图 Dimensions (mm)

KC(D)Q2L

Ø12~Ø25

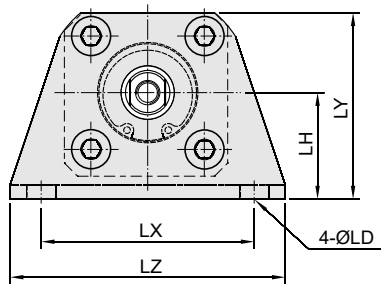

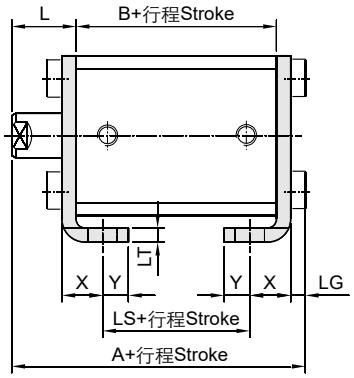

杆端外螺纹
Rod end male thread

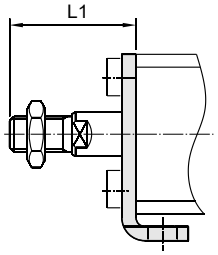

Ø32~Ø100

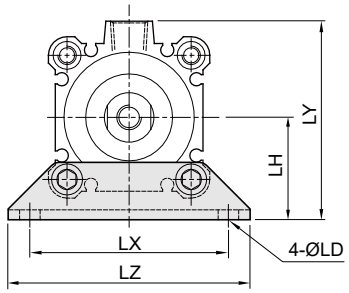

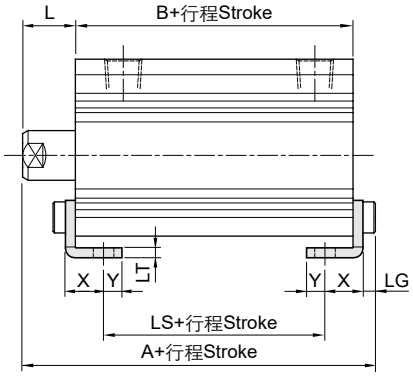

杆端外螺纹
Rod end male thread

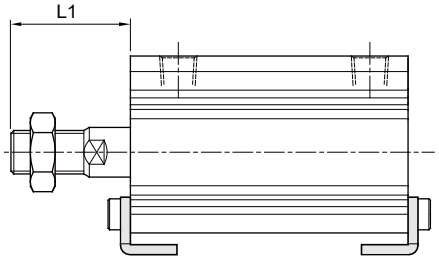

零件号 Part No.	缸径 Bore size	行程范围 Stroke range	KCQ2L			KCDQ2L			L	L1	LD	LG	LH	LT	LX	LY	LZ	X	Y
			A	B	LS	A	B	LS											
FCQ-L012	12	5~30	35.3	17	5	46.3	28	16	13.5	24	4.5	2.8	17	2	34	29.5	44	8	4.5
FCQ-L016	16	5~30	36.8	18.5	6.5	48.8	30.5	18.5	13.5	25.5	4.5	2.8	19	2	38	33.5	48	8	5
FCQ-L020	20	5~50	41.2	19.5	7.1	53.2	31.5	19.1	14.5	28.5	6.5	4	24	3	48	42	62	9.2	5.8
FCQ-L025	25	5~50	44.7	22.5	7.1	54.7	32.5	17.1	15	32.5	6.5	4	26	3	52	46	66	10.7	5.8
FCQ-L032	32	5~50	47	23	6.6	57	33	16.6	17	38.5	6.6	4	30	3	57	57	71	11.2	5.8
		75, 100	57	33	16.6														
FCQ-L040	40	5~50	53.5	29.5	13.1	63.5	39.5	23.1	17	38.5	6.6	4	33	3	64	64	78	11.2	7
		75, 100	63.5	39.5	23.1														
FCQ-L050	50	10~50	56.5	30.5	12.1	66.5	40.5	22.1	18	43.5	9	5	39	3	79	78	95	12.2	8
		75, 100	66.5	40.5	22.1														
FCQ-L063	63	10~50	62	36	14.6	72	46	24.6	18	43.5	11	5	46	3	95	91.5	113	13.7	9
		75, 100	72	46	24.6														
FCQ-L080	80	10~50	75	43.5	18.5	85	53.5	28.5	20	53.5	13	7	59	4.5	118	114	140	16.5	11
		75, 100	85	53.5	28.5														
FCQ-L100	100	10~50	88	53	19	98	63	29	22	53.5	13	7	71	6	137	136	162	23	12.5
		75, 100	98	63	29														

* 标注尺寸与基本型相同。The unmentioned dimensions are same as the Basic type.

薄型气缸
Compact Air Cylinder
Series KCQ2

外形尺寸图 Dimensions (mm)

KC(D)Q2F

Ø12~Ø25

杆端外螺纹
Rod end male thread

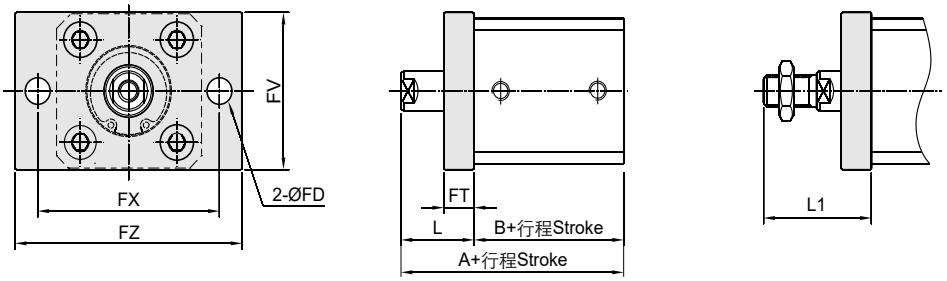

Ø32~Ø100

杆端外螺纹
Rod end male thread

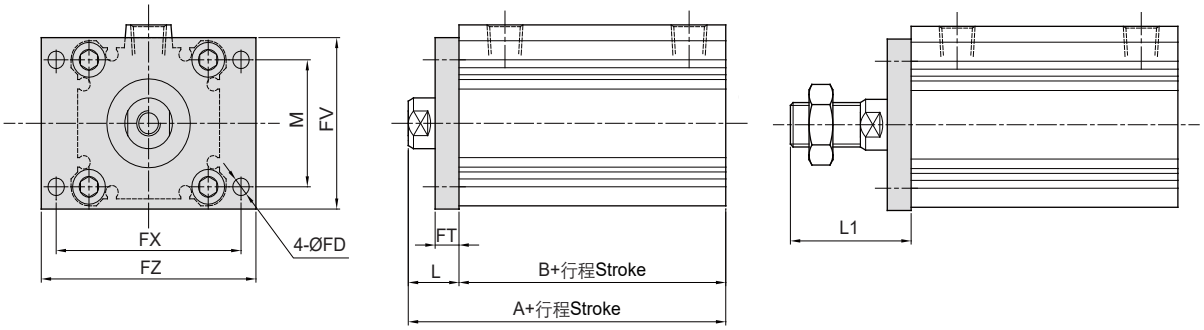

零件号 Part No.	缸径 Bore size	行程范围 Stroke range	KCQ2F		KCDQ2F		FD	FT	FV	FX	FZ	L	L1	M
			A	B	A	B								
FCQ-F012	12	5~30	30.5	17	41.5	28	4.5	5.5	25	45	55	13.5	24	-
FCQ-F016	16	5~30	32	18.5	44	30.5	4.5	5.5	30	45	55	13.5	25.5	-
FCQ-F020	20	5~50	34	19.5	46	31.5	6.5	8	39	48	60	14.5	28.5	-
FCQ-F025	25	5~50	37.5	22.5	47.5	32.5	6.5	8	42	52	64	15	32.5	-
FCQ-F032	32	5~50	40	23	50	33	5.5	8	48	56	65	17	38.5	34
		75, 100	50	33										
FCQ-F040	40	5~50	46.5	29.5	56.5	39.5	5.5	8	54	62	72	17	38.5	40
		75, 100	56.5	39.5										
FCQ-F050	50	10~50	48.5	30.5	58.5	40.5	6.5	9	67	76	89	18	43.5	50
		75, 100	58.5	40.5										
FCQ-F063	63	10~50	54	36	64	46	9	9	80	92	108	18	43.5	60
		75, 100	64	46										
FCQ-F080	80	10~50	63.5	43.5	73.5	53.5	11	11	99	116	134	20	53.5	77
		75, 100	73.5	53.5										
FCQ-F100	100	10~50	75	53	85	63	11	11	117	136	154	22	53.5	94
		75, 100	85	63										

* 标注尺寸与基本型相同。The unmentioned dimensions are same as the Basic type.

杆端螺母 Rod end nut

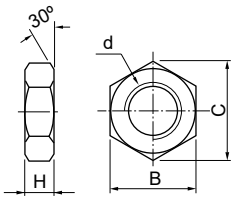

零件号 Part No.	缸径 Bore size	B	C	d	H
FNT-015A	12	8	9.2	M5x0.8	4
FNTJ-015A	16	10	11.5	M6x1.0	5
FNT-02	20	13	15	M8x1.25	5
FNT-03	25	17	19.6	M10x1.25	6
FNT-04	32, 40	22	25.4	M14x1.5	8
FNT-05	50, 63	27	31.2	M18x1.5	11
FNT-08	80	32	37	M22x1.5	13
FNT-10	100	41	47.3	M26x1.5	16

薄型气缸
Compact Air Cylinder
Series KCQ2

外形尺寸图 Dimensions (mm)

KC(D)Q2G

Ø12~Ø25

杆端外螺纹
Rod end male thread

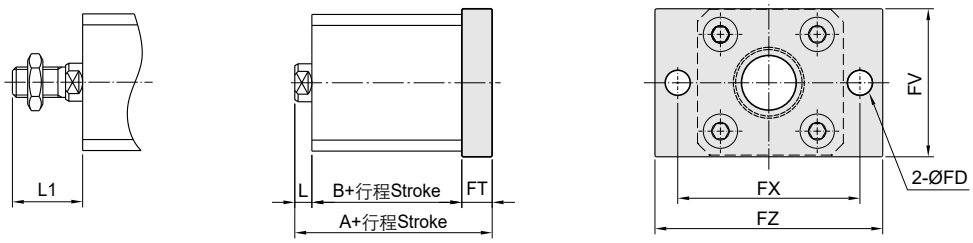

Ø32~Ø100

杆端外螺纹
Rod end male thread

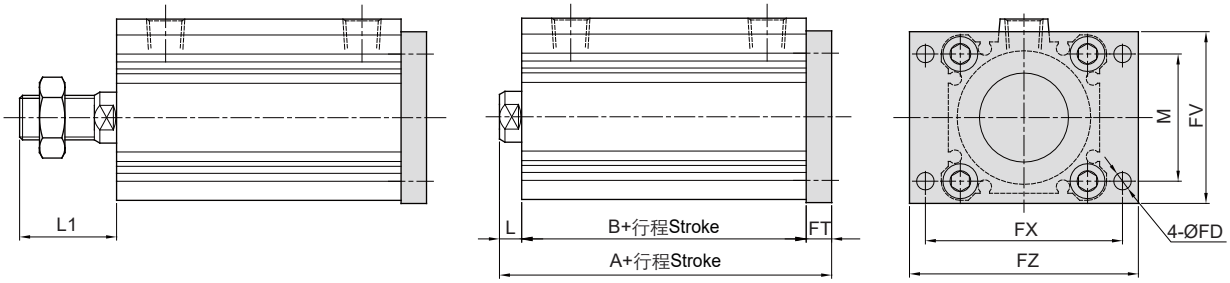

零件号 Part No.	缸径 Bore size	行程范围 Stroke range	KCQ2G		KCDQ2G		FD	FT	FV	FX	FZ	L	L1	M
			A	B	A	B								
FCQ-F012	12	5~30	26	17	37	28	4.5	5.5	25	45	55	3.5	14	-
FCQ-F016	16	5~30	27.5	18.5	39.5	30.5	4.5	5.5	30	45	55	3.5	15.5	-
FCQ-F020	20	5~50	32	19.5	44	31.5	6.5	8	39	48	60	4.5	18.5	-
FCQ-F025	25	5~50	35.5	22.5	45.5	32.5	6.5	8	42	52	64	5	22.5	-
FCQ-F032	32	5~50	38	23	48	33	5.5	8	48	56	65	7	28.5	34
		75, 100	48	33										
FCQ-F040	40	5~50	44.5	29.5	54.5	39.5	5.5	8	54	62	72	7	28.5	40
		75, 100	54.5	39.5										
FCQ-F050	50	10~50	47.5	30.5	57.5	40.5	6.5	9	67	76	89	8	33.5	50
		75, 100	57.5	40.5										
FCQ-F063	63	10~50	53	36	63	46	9	9	80	92	108	8	33.5	60
		75, 100	63	46										
FCQ-F080	80	10~50	64.5	43.5	74.5	53.5	11	11	99	116	134	10	43.5	77
		75, 100	74.5	53.5										
FCQ-F100	100	10~50	76	53	86	63	11	11	117	136	154	12	43.5	94
		75, 100	86	63										

* 标注尺寸与基本型相同。
The unmentioned dimensions are same as the Basic type.

销子Pin

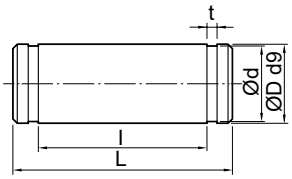

适用双U型钩 Applicable for double trunnion

零件号 Part No.	缸径 Bore size	d	D	l	L	t	扣环 Snap ring
FIY-G012	12	$4.8^{0}_{-0.04}$	$5^{-0.03}_{-0.06}$	10.2	14.6	$0.7^{+0.1}_{0}$	STW-5
FIY-G015	16	$4.8^{0}_{-0.04}$	$5^{-0.03}_{-0.06}$	12.2	16.6	$0.7^{+0.1}_{0}$	STW-5
FIY-G02	20	$7.6^{0}_{-0.06}$	$8^{-0.04}_{-0.08}$	16.2	21	$0.9^{+0.1}_{0}$	STW-8
FIY-G03	25	$9.6^{0}_{-0.06}$	$10^{-0.04}_{-0.08}$	20.2	25.6	$1.15^{+0.14}_{0}$	STW-10
FIY-G04	32, 40	$9.6^{0}_{-0.06}$	$10^{-0.04}_{-0.08}$	36.2	41.6	$1.15^{+0.14}_{0}$	STW-10
FIY-G06	50, 63	$13.4^{-0.05}_{-0.10}$	$14^{-0.05}_{-0.10}$	44.2	50.6	$1.15^{+0.14}_{0}$	STW-14
FIY-G08	80	$17^{-0.05}_{-0.10}$	$18^{-0.05}_{-0.10}$	56.2	64	$1.35^{+0.14}_{0}$	STW-18
FIY-G10	100	$21^{-0.07}_{-0.12}$	$22^{-0.07}_{-0.12}$	64.2	72	$1.35^{+0.14}_{0}$	STW-22

薄型气缸
Compact Air Cylinder
Series KCQ2

外形尺寸图 Dimensions (mm)

KC(D)Q2D

Ø12~Ø25

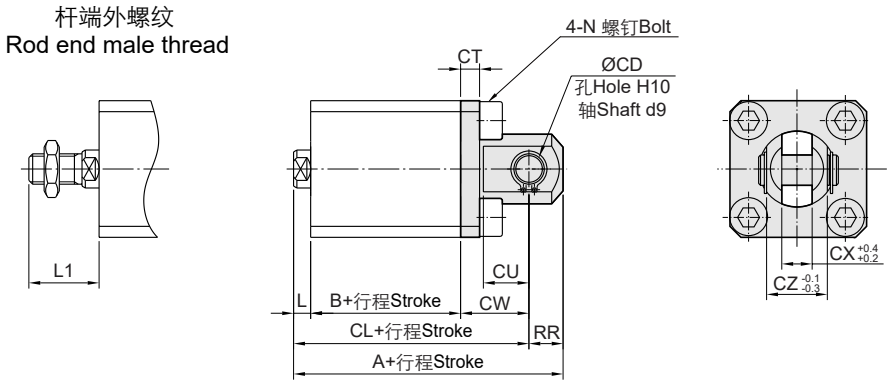

Ø32~Ø100

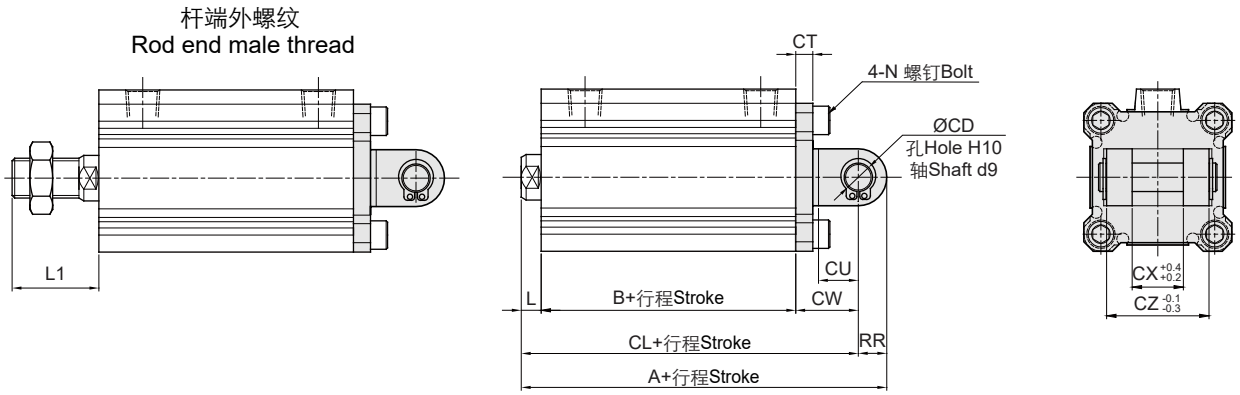

3

零件号 Part No.	缸径 Bore size	行程范围 Stroke range	KCQ2D			KCDQ2D			CD	CT	CU	CW	CX	CZ	L	L1	N	RR
			A	B	CL	A	B	CL										
FCQ-D012	12	5~30	40.5	17	34.5	51.5	28	45.5	5	4	7	14	5	10	3.5	14	M4x0.7	6
FCQ-D016	16	5~30	43	18.5	37	55	30.5	49	5	4	10	15	6.5	12	3.5	15.5	M4x0.7	6
FCQ-D020	20	5~50	51	19.5	42	63	31.5	54	8	5	12	18	8	16	4.5	18.5	M6x1.0	9
FCQ-D025	25	5~50	57.5	22.5	47.5	67.5	32.5	57.5	10	5	14	20	10	20	5	22.5	M6x1.0	10
FCQ-D032	32	5~50	60	23	50	70	33	60	10	5	14	20	18	36	7	28.5	M6x1.0	10
		75, 100	70	33	60													
FCQ-D040	40	5~50	68.5	29.5	58.5	78.5	39.5	68.5	10	6	14	22	18	36	7	28.5	M6x1.0	10
		75, 100	78.5	39.5	68.5													
FCQ-D050	50	10~50	80.5	30.5	66.5	90.5	40.5	76.5	14	7	20	28	22	44	8	33.5	M8x1.25	14
		75, 100	90.5	40.5	76.5													
FCQ-D063	63	10~50	88	36	74	98	46	84	14	8	20	30	22	44	8	33.5	M10x1.5	14
		75, 100	98	46	84													
FCQ-D080	80	10~50	109.5	43.5	91.5	119.5	53.5	101.5	18	10	27	38	28	56	10	43.5	M12x1.75	18
		75, 100	119.5	53.5	101.5													
FCQ-D100	100	10~50	132	53	110	142	63	120	22	13	31	45	32	64	12	43.5	M12x1.75	22
		75, 100	142	63	120													

* 标注尺寸与基本型相同。The unmentioned dimensions are same as the Basic type.

外形尺寸图 Dimensions (mm)

I型单肘节接头 I type single kunckle joint

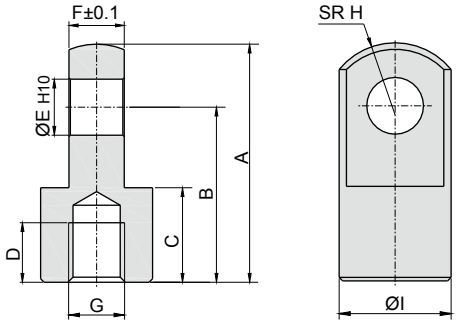

零件号 Part No.	缸径 Bore size	A	B	C	D	E	F	G	H	I
FCQ-I012	12	21.5	16	9	6	5	4.7	M5x0.8	6.3	10
FCQ-I016	16	32	21	11	8	5	6.2	M6x1.0	8.1	12
FCQ-I020	20	34	25	13.5	8.5	8	7.7	M8x1.25	10.3	16
FCQ-I025	25	41	30	16	11	10	9.7	M10x1.25	12.8	20
FCQ-I032 (040)	32, 40	42	30	16	14	10	17.6	M14x1.5	12	22
FCQ-I050 (063)	50, 63	56	40	20	18	14	21.6	M18x1.5	16	28
FCQ-I080	80	71	50	23	21	18	27.6	M22x1.5	21	38
FCQ-I100	100	79	55	24	22	22	31.6	M26x1.5	24	44

Y型双肘节接头 Y type double kunckle joint

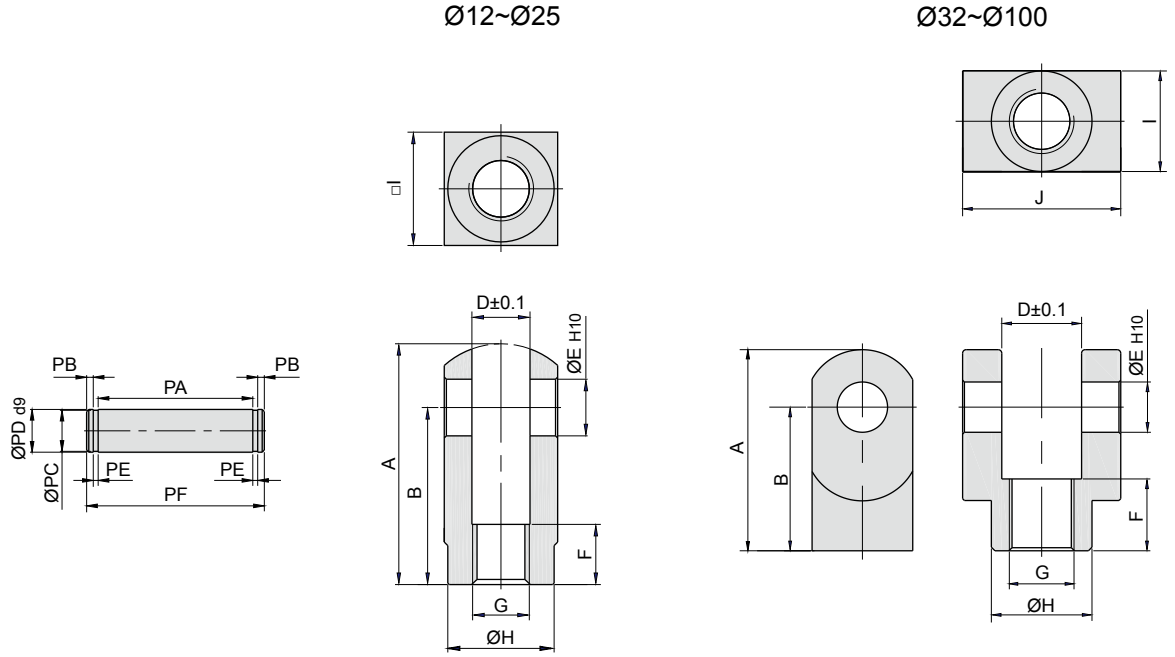

零件号 Part No.	缸径 Bore size	A	B	D	E	F	G	H	I	J	PA	PB	PC	PD	PE	PF
FCQ-Y012	12	22	16	5.3	5	6	M5x0.8	9	10	-	10.2	1.5	4	5	0.7	14.6
FCQ-Y016	16	28	21	6.6	5	11	M6x1.0	11	12	-	12.4	1.5	4	5	0.7	16.8
FCQ-Y020	20	34	25	8.3	8	8.5	M8x1.25	15	16	-	16.2	1.5	7	8	0.9	21
FCQ-Y025	25	41	30	10.3	10	10.5	M10x1.25	19	20	-	20.2	2	8	10	1.1	26.4
FCQ-Y032 (040)	32, 40	42	30	18.4	10	16	M14x1.5	22	22	36	36.2	2	8	10	1.1	42.4
FCQ-Y050 (063)	50, 63	56	40	22.4	14	20	M18x1.5	28	28	44	44.2	2	12	14	1.1	50.4
FCQ-Y080	80	71	50	28.4	18	23	M22x1.5	38	38	56	56.2	2	15	18	1.7	63.6
FCQ-Y100	100	79	55	32.4	22	24	M26x1.5	44	44	64	64.2	2.5	19	22	1.7	72.6

ARK

薄型气缸(长行程)
Compact Air Cylinder (Long Stroke)
Series KCQ2 (Ø32~Ø100)

规格 Specifications

缸径 Bore size (mm)	32	40	50	63	80	100
接管口径 Port size Rc(PT)	1/8		1/4		3/8	
使用流体 Fluid	过滤压缩空气 Filtered compressed air					
动作形式 Action	双动 Double acting					
保证耐压力 Proof pressure (MPa)	1.5					
使用压力范围 Operating pressure range (MPa)	0.05~1.0					
环境及流体温度 Ambient and fluid temperature	-5~60℃ (未冻结 No freezing)					
活塞速度 Piston speed	50~500 mm/s					
缓冲 Cushion	橡胶缓冲 Rubber bumper					
行程公差 Stroke tolerance (mm)	$^{+1.4}_{0}$					
* 润滑 Lubrication	不需要 Not required					

* 如需要润滑请使用透平 1 号油 ISOVG32。Please use Turbine oil 1st Grade ISOVG32 if necessary.

行程 / 磁性开关 Stroke/ Auto switch

缸径 Bore size (mm)	标准行程 Standard stroke (mm)	* 中间行程范围 *Middle stroke range (mm)	磁性开关 / 轨道安装 Auto switch/ Rail mounting
32, 40, 50, 63, 80, 100	125, 150, 175, 200, 250, 300	101~299	D-M9BK

* 中间行程的最小间隔为 1mm, 通过在比中间行程长的标准行程缸筒内安装隔板的方式实现。
Middle stroke interval minimum 1 mm is implemented by using spacer in barrel of standard stroke.

型号表示方法 How to Order

KC [D] Q2 [A] [32] - [200] [D] [M]

磁环 Magnet

-	无 None
D	内置磁环 Built-in magnet

安装形式 Mounting

A	基本型 (两端内螺纹) Basic (Both ends female thread)
L	脚座 Foot
F	前法兰 Front flange
G	后法兰 Rear flange
D	双 U 型钩 Double clevis

缸径 Bore size (mm)

行程 Stroke (mm)

动作形式 Action

D	双动 Double acting

杆端螺纹 Rod end thread

-	杆端内螺纹 Rod end female thread
M	杆端外螺纹 Rod end male thread

薄型气缸(长行程)
Compact Air Cylinder (Long Stroke)
Series KCQ2

外形尺寸图 Dimensions (mm)

KC(D)Q2A

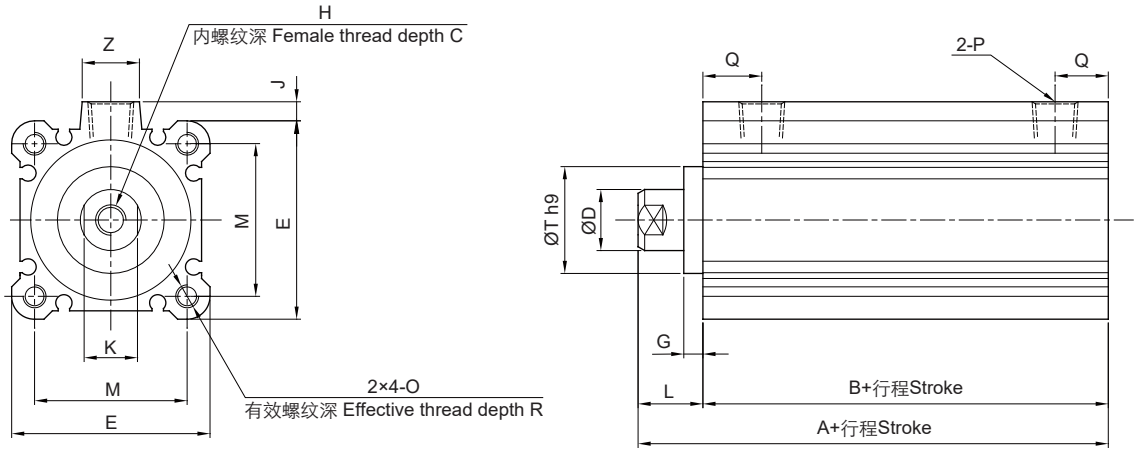

杆端外螺纹
Rod end male thread

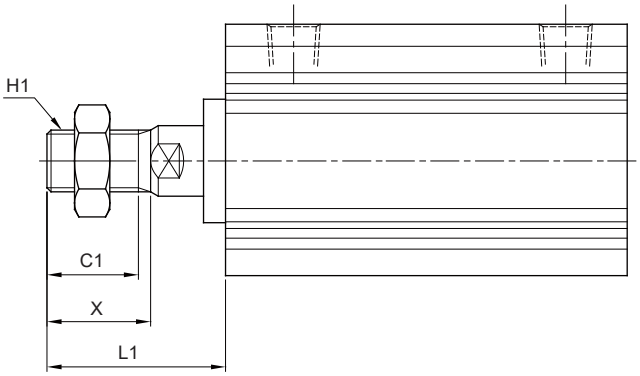

缸径 Bore size	A	B	C	C1	D	E	G	H	H1	J	K	L	L1	M	O	P	Q	R	T	X	Z
32	62.5	45.5	13	20.5	16	45	5	M8x1.25	M14x1.5	4.5	14	17	38.5	34	M6x1.0	1/8	12.5	10	$22^{0}_{-0.052}$	23.5	13
40	72	55	13	20.5	16	52	5	M8x1.25	M14x1.5	5	14	17	38.5	40	M6x1.0	1/8	14	10	$28^{0}_{-0.052}$	23.5	14
50	73.5	55.5	15	26	20	64	5	M10x1.5	M18x1.5	7	18	18	43.5	50	M8x1.25	1/4	14	14	$35^{0}_{-0.062}$	28.5	16
63	75	57	15	26	20	77	5	M10x1.5	M18x1.5	7	18	18	43.5	60	M10x1.5	1/4	16.5	18	$35^{0}_{-0.062}$	28.5	19
80	86	66	21	32.5	25	98	5	M16x2.0	M22x1.5	6	22	20	53.5	77	M12x1.75	3/8	19	22	$43^{0}_{-0.062}$	35.5	22
100	97.5	75.5	27	32.5	30	117	5	M20x2.5	M26x1.5	6.5	27	22	53.5	94	M12x1.75	3/8	23	22	$59^{0}_{-0.074}$	35.5	26

ARK

薄型气缸(大缸径)
Compact Air Cylinder (Large Bore Size)
Series KCQ2 (Ø125~Ø200)

规格 Specifications

缸径 Bore size (mm)	125	140	160	200
接管口径 Port size Rc(PT)	3/8			1/2
使用流体 Fluid	过滤压缩空气 Filtered compressed air			
动作形式 Action	双动 Double acting			
保证耐压力 Proof pressure (MPa)	1.5			
使用压力范围 Operating pressure range (MPa)	0.05~1.0			
环境及流体温度 Ambient and fluid temperature	-5~60℃ (未冻结 No freezing)			
活塞速度 Piston speed	50~500 mm/s			
缓冲 Cushion	橡胶缓冲 Rubber bumper			
行程公差 Stroke tolerance (mm)	$^{+1.4}_{0}$			
* 润滑 Lubrication	不需要 Not required			

* 如需要润滑请使用透平 1 号油 ISOVG32。Please use Turbine oil 1st Grade ISOVG32 if necessary.

行程 / 磁性开关 Stroke/ Auto switch

缸径 Bore size (mm)	标准行程 Standard stroke (mm)	* 中间行程范围 *Middle stroke range (mm)	磁性开关 / 轨道安装 Auto switch/ Rail mounting
125	10, 20, 30, 40, 50, 75, 100, 125, 150, 175, 200, 250, 300	5~295	D-A73K
140, 160, 200			D-M9BK

* 中间行程的最小间隔为 5mm, 通过在比中间行程长的标准行程缸筒内安装隔板的方式实现。
Middle stroke interval minimum 5 mm is implemented by using spacer in barrel of standard stroke.

型号表示方法 How to Order

KC [D] Q2 [A] [160] - [50] [D] [M]

磁环 Magnet

-	无 None
D	内置磁环 Built-in magnet

安装形式 Mounting

A	基本型 (两端沉孔和内螺纹以及通孔) Basic (Both ends tapped with female thread and through-holes)

缸径 Bore size (mm)

行程 Stroke (mm)

动作形式 Action

D	双动 Double acting

杆端螺纹 Rod end thread

-	杆端内螺纹 Rod end female thread
M	杆端外螺纹 Rod end male thread

薄型气缸(大缸径)
Compact Air Cylinder (Large Bore Size)
Series KCQ2

外形尺寸图 Dimensions (mm)

KC(D)Q2A

Ø125

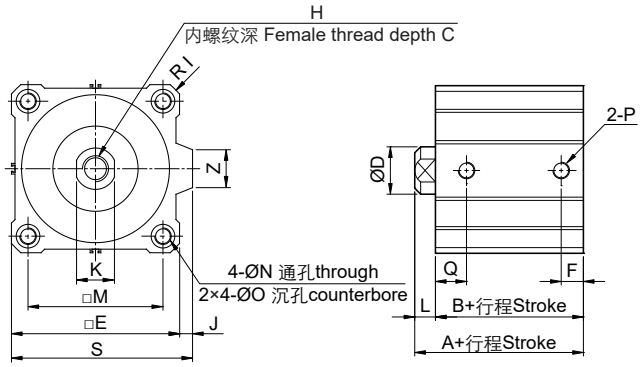

Ø140, Ø160

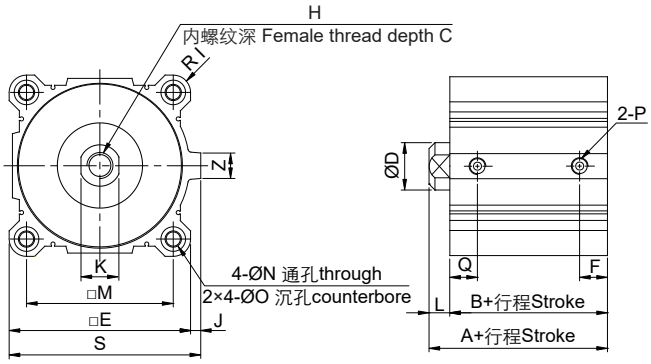

Ø200

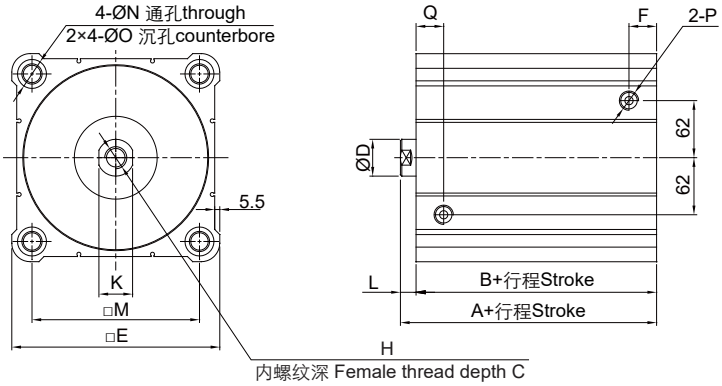

杆端外螺纹
Rod end male thread

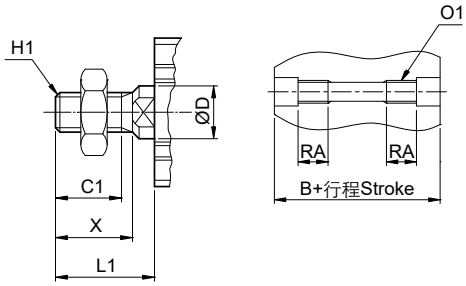

缸径 Bore size	A	B	C	C1	D	E	F	H	H1	I	J	K	L	L1	M	N	O	O1	OD	P	Q	RA	S	X	Z
125	99	83	30	42	35	142	24.5	M22x2.5	M30x1.5	95	11	32	16	58	114	12.5	21.2	M14x2.0	18.4	3/8	24.5	25	153	45	32
140	99	83	30	42	35	158	24.5	M22x2.5	M30x1.5	15	10	32	16	58	128	12.5	21.2	M14x2.0	18.4	3/8	24.5	25	168	45	32
160	108	91	33	47	40	178	27.5	M24x3	M36x1.5	17	10	36	17	64	144	14.5	24.2	M16x2.0	21.2	3/8	27.5	28	188	50	32
200	126	109	33	47	40	226	30	M24x3	M36x1.5	-	-	36	17	64	182	19	31.5	M22x2.5	26	1/2	30	38	-	50	-

杆端螺母 Rod end nut

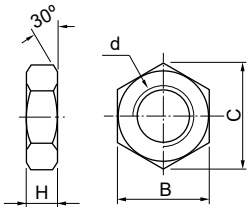

零件号 Part No.	缸径 Bore size	B	C	d	H
FNT-12	125, 140	46	53.1	M30x1.5	18
FNT-16	160, 200	55	63.5	M36x1.5	21

ARK 薄型气缸
Compact Air Cylinder
Series SDA (Ø12~Ø100)

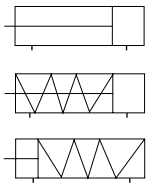

规格 Specifications

缸径 Bore size (mm)		12	16	20	25	32	40	50	63	80	100
接管口径 Port size Rc(PT)		M5x0.8				1/8		1/4		3/8	
使用流体 Fluid		过滤压缩空气 Filtered compressed air									
动作形式 Action	SSA, STA	单动 Single acting								-	
	SDA, SDAD, SDAJ	双动 Double acting									
保证耐压力 Proof pressure (MPa)		1.5									
使用压力范围 Operating pressure range (MPa)	双动 Double acting	0.15~1.0									
	单动 Single acting	0.2~1.0									
环境及流体温度 Ambient and fluid temperature		-5~60℃ (未冻结 No freezing)									
活塞速度 Piston speed	双动 Double acting	30~500 mm/s									
	单动 Single acting	50~500 mm/s									
缓冲 Cushion		橡胶缓冲 Rubber bumper									
行程公差 Stroke tolerance (mm)		$^{+1.0}_{0}$									
* 润滑 Lubrication		不需要 Not required									

* 如需要润滑请使用透平 1 号油 ISOVG32。Please use Turbine oil 1st Grade ISOVG32 if necessary.

行程 / 磁性开关 Stroke/ Auto switch

缸径 Bore size (mm)		标准行程 Standard stroke (mm) 双动 Double acting	单动 Single acting	*1) 最大行程 Maximum stroke (mm) 双动 Double acting	*2) 容许行程 Permissible stroke (mm) 双动 Double acting	磁性开关 / 轨道安装 Auto switch/ Rail mounting
12, 16	带磁环 Built-in magnet	5, 10, 15, 20, 25, 30, 35, 40, 45, 50	5, 10, 15, 20, 25, 30	50	70	KT-11R
	不带磁环 W/o magnet	5, 10, 15, 20, 25, 30, 35, 40, 45, 50, 55, 60		60	80	
20	带磁环 Built-in magnet	5, 10, 15, 20, 25, 30, 35, 40, 45, 50, 55, 60, 65, 70, 75, 80, 85, 90		90	130	
	不带磁环 W/o magnet	5, 10, 15, 20, 25, 30, 35, 40, 45, 50, 55, 60, 65, 70, 75, 80, 85, 90, 100		100	140	
25, 32, 40, 50, 63	带磁环 Built-in magnet	5, 10, 15, 20, 25, 30, 35, 40, 45, 50, 55, 60, 65, 70, 75, 80, 85, 90, 100, 110, 120		120	150	
	不带磁环 W/o magnet	5, 10, 15, 20, 25, 30, 35, 40, 45, 50, 55, 60, 65, 70, 75, 80, 85, 90, 100, 110, 120, 130		130	160	
80, 100	带磁环 Built-in magnet	5, 10, 15, 20, 25, 30, 35, 40, 45, 50, 55, 60, 65, 70, 75, 80, 85, 90, 100, 110, 120		120	150	
	不带磁环 W/o magnet	5, 10, 15, 20, 25, 30, 35, 40, 45, 50, 55, 60, 65, 70, 75, 80, 85, 90, 100, 110, 120, 130		130	160	

*1) 中间行程 =1~(最大行程 -1)，最小间隔为 1mm, 通过在比中间行程长的标准行程缸筒内安装隔板的方式实现。
Middle stroke=1~(Max. stroke-1) with minimum interval 1 mm, implemented by using spacer in barrel of standard stroke.
*2) 行程介于最大行程和容许行程之间作非标件处理。 Stroke between maximum stroke and permissible stroke is processed as nonstandard order.

3

型号表示方法 How to Order

SDA 20 - 30 - 20 - 10 S B

型号 Model

SDA	双动 Double acting
SSA	单动 (弹簧压回) Single acting (Spring return)
STA	单动 (弹簧压出) Single acting (Spring extend)
SDAD	双活塞杆 Double rod
SDAJ	双活塞杆可调行程 Double rod with adjustable stroke
SDAT	双行程 / 单杆 Dual stroke/ Single rod
SDAW	双行程 / 双杆 Dual stroke/ Double rod

缸径 Bore size (mm)

行程 Stroke (mm)

行程 2 Stroke 2 (mm) (SDAT, SDAW)

可调行程 Adjustable stroke (SDAJ)

10	10 mm
20	20 mm
30	30 mm
40	40 mm
50	50 mm
75	75 mm
100	100 mm

磁环 Magnet

-	无 None
S	内置磁环 Built-in magnet

杆端螺纹形式 Rod end thread type

-	内螺纹 Female
B	外螺纹 Male

薄型气缸
Compact Air Cylinder
Series SDA

外形尺寸图 Dimensions (mm)

SDA

Ø12, Ø16

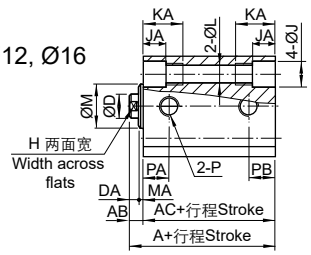

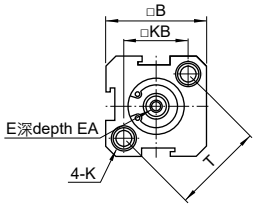

Ø20~Ø100

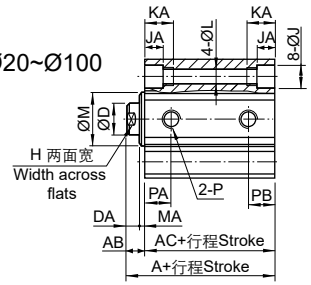

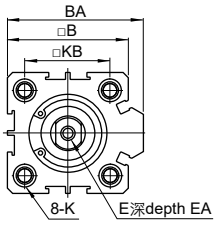

SSA

Ø12, Ø16

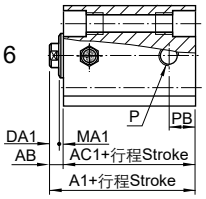

Ø20~Ø63

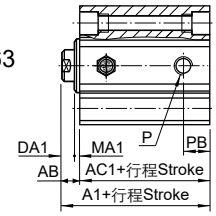

SST

Ø12, Ø16

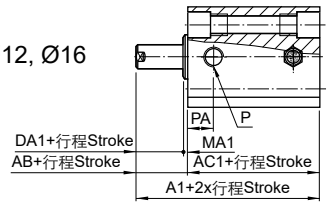

Ø20~Ø63

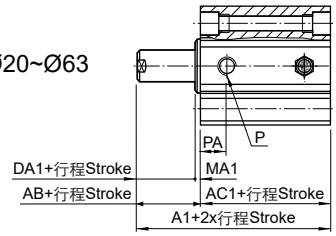

缸径 Bore size	*A1 (-)		*A1 (-S)		*AC1 (-)		*AC1 (-S)		DA1	MA1
	ST ≤ 10	ST >10	ST ≤ 10	ST >10	ST ≤ 10	ST >10	ST ≤ 10	ST >10		
12	32	42	42	52	27	37	37	47	4	1
16	34	44	44	54	28.5	38.5	38.5	48.5	4	1.5
20	35	45	45	55	29.5	39.5	39.5	49.5	4	1.5
25	37	47	47	57	31	41	41	51	4	2
32	41.5	51.5	51.5	61.5	34.5	44.5	44.5	54.5	4	2.4
40	43	53	53	63	36	46	46	56	4	3
50	47	57	57	67	38	48	48	58	5	4
63	51	61	61	71	42	52	52	62	5	4

杆端外螺纹
Rod End Male Thread

Ø12~Ø100

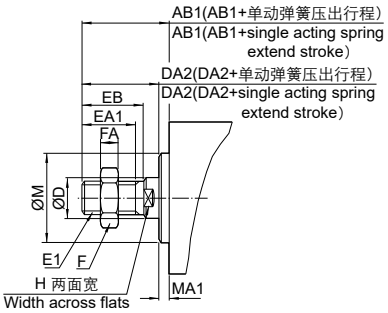

*	
-	不带磁环 W/o magnet ring
-S	带磁环 Built-in magnet ring

缸径 Bore size	AB1	DA2	E1	EA1	EB	F	FA	MA1	
								SDAD SDAJ	其他 Other
12	17	16	M5x0.8	10	12	8	4	1	1
16	17.5	16	M5x0.8	10	12	8	4	1.5	1.5
20	20.5	19	M6x1.0	13	15	10	5	1.5	1.5
25	23	21	M8x1.25	15	17	12	6	2	2
32	25	22	M10x1.25	15	18	17	6	3	2.5
40	35	32	M14x1.5	25	28	19	8	3	3
50	37	33	M18x1.5	25	28	27	11	4	4
63	37	33	M18x1.5	25	28	27	11	4	4
80	44	39	M22x1.5	30	33	32	13	5	5
100	50	45	M26x1.5	35	38	36	13	5	5

缸径 Bore size	*A		AB	*AC		B	BA	D	DA	E	EA	H	J	JA	K	KA	KB	L	M	MA	P	PA		PB		T
	-	-S		-	-S																	ST =5	ST >5	ST =5	ST >5	
12	22	32	5	17	27	25	-	6	4	M3x0.5	6	5	6.5	4.5	M5x0.8	12	16.2	4.2	10.2	1	M5x0.8	7.5	7.5	5	5	23
16	24	34	5.5	18.5	28.5	29	-	6	4	M3x0.5	6	5	6.5	4.5	M5x0.8	12	19.8	4.2	11	1.5	M5x0.8	8	8	5.5	5.5	28
20	25	35	5.5	19.5	29.5	34	36	8	4	M4x0.7	8	6	6.5	4.5	M5x0.8	14	24	4.2	13	1.5	M5x0.8	9	9	5.5	5.5	-
25	27	37	6	21	31	40	42	10	4	M5x0.8	10	8	8.2	5.5	M6x1.0	15	28	4.6	17	2	M5x0.8	9	9	5.5	5.5	-
32	31.5	41.5	7	24.5	34.5	44	50	12	4.5	M6x1.0	12	10	8.2	5.5	M6x1.0	16	34	4.6	22	2.5	1/8	9	9	6.5	9	-
40	33	43	7	26	36	52	58.5	16	4	M8x1.25	12	14	10	7.5	M8x1.25	20	40	6.5	28	3	1/8	9.5	9.5	7.5	7.5	-
50	37	47	9	28	38	62	71.5	20	5	M10x1.5	15	17	11	8.5	M8x1.25	25	48	6.5	38	4	1/4	8	10.5	8	10.5	-
63	41	51	9	32	42	75	84.5	20	5	M10x1.5	15	17	11	8.5	M8x1.25	25	60	6.5	40	4	1/4	9.5	12	9.5	11	-
80	52	62	11	41	51	94	104	25	6	M14x1.5	20	22	14	10.5	M12x1.75	25	74	9.2	45	5	3/8	11.5	14.5	11.5	14.5	-
100	63	73	12	51	61	114	124	32	7	M18x1.5	20	27	17.5	13	M14x2.0	30	90	11.3	55	5	3/8	16	20.5	16	20.5	-

薄型气缸
Compact Air Cylinder
Series SDA

外形尺寸图 Dimensions (mm)

SDAD

Ø12, Ø16

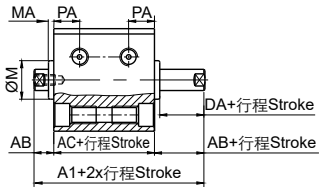

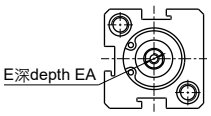

Ø20~Ø100

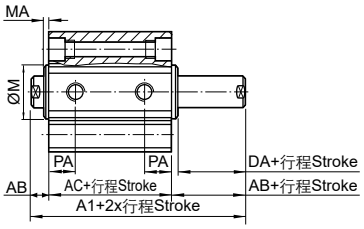

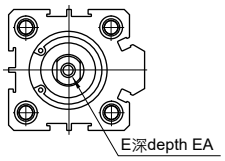

SDAJ

Ø12, Ø16

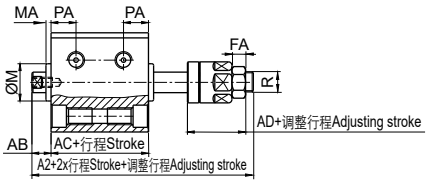

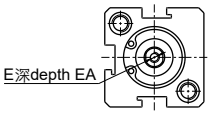

Ø20~Ø100

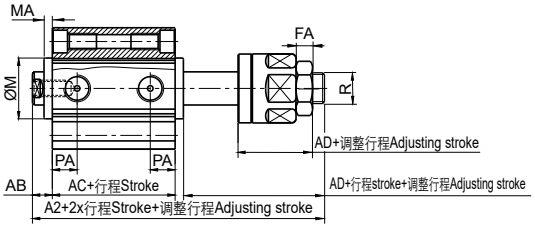

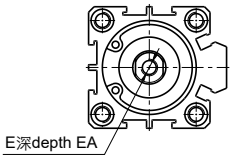

缸径 Bore size	*A1		*A2		AB	*AC		AD	DA	E	EA		FA	M	MA	PA		R
	-	-S	-	-S		-	-S				ST ≤ 10	ST >10				ST =5	ST >5	
12	27	37	40	50	5	17	27	17	4	M3x0.5	6		4	10.2	1	5.5	6.3	M5x0.8
16	29.5	39.5	42.5	52.5	5.5	18.5	28.5	17	4	M3x0.5	6		4	11	1.5	6.5	7.3	M5x0.8
20	30.5	40.5	47.5	57.5	5.5	19.5	29.5	21	4	M4x0.7	8 (6.5 (ST=5))		5	13	1.5	7.5	7.5	M6x1.0
25	33	43	54	64	6	21	31	25	4	M5x0.8	10 (7 (ST=5))		6	17	2	8	8	M8x1.25
32	38.5	48.5	61.5	71.5	7	24.5	34.5	27	4	M6x1.0	8	12	6	22	3	8	9	M10x1.25
40	40	50	64	74	7	26	36	28	4	M8x1.25	8	12	7	28	3	8	10	M12x1.25
50	46	56	70	80	9	28	38	29	5	M10x1.5	8	15	8	38	4	8	10.5	M16x1.5
63	50	60	74	84	9	32	42	29	5	M10x1.5	10	15	8	40	4	9.5	11.8	M16x1.5
80	63	73	92.5	102.5	11	41	51	35.5	6	M14x1.5	13	20	10	45	5	11.5	14.5	M20x1.5
100	75	85	110.5	120.5	12	51	61	42.5	7	M18x1.5	18	20	13.5	55	5	16	20.5	M27x2.0

*	
-	不带磁环 W/o magnet ring
-S	带磁环 Built-in magnet ring

薄型气缸
Compact Air Cylinder
Series SDA

外形尺寸图 Dimensions (mm)

SDAT

Ø12, Ø16

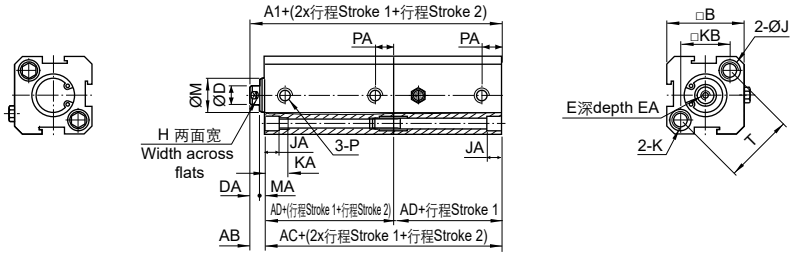

Ø20~Ø100

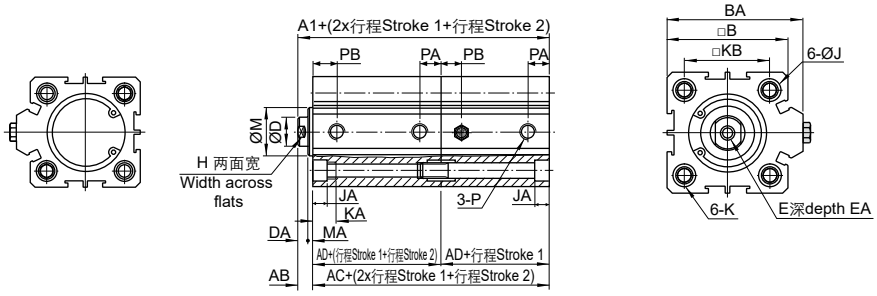

SDAW

Ø12, Ø16

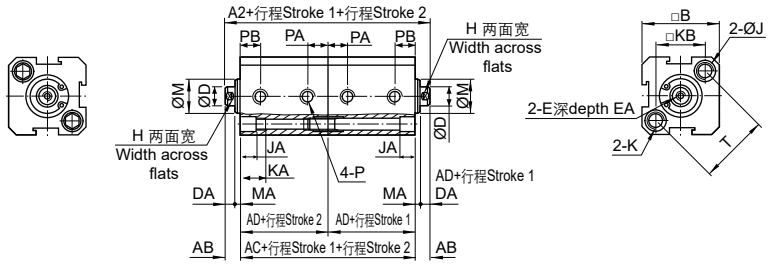

Ø20~Ø100

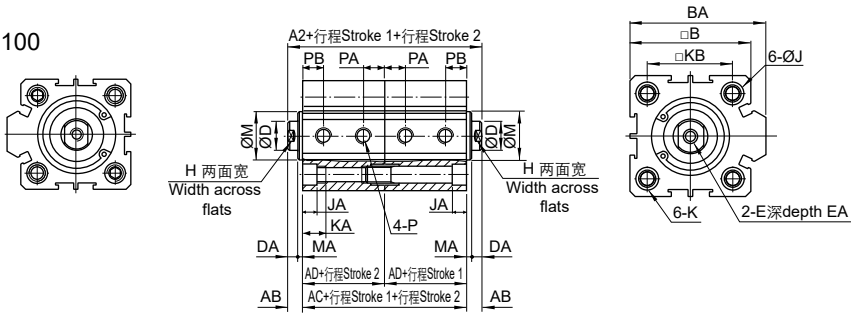

缸径 Bore size	P	PA		PB	
		ST =5	ST >5	ST =5	ST >5
12	M5x0.8	5	5	7.5	7.5
16	M5x0.8	5.5	5.5	8	8
20	M5x0.8	5.5	5.5	9	9
25	M5x0.8	5.5	5.5	9	9
32	1/8	6.5	9	9	9
40	1/8	7.5	7.5	9.5	9.5
50	1/4	8	10.5	8	10.5
63	1/4	9.5	11	9.5	12
80	3/8	11.5	14.5	11.5	14.5
100	3/8	16	20.5	16	20.5

*	
-	不带磁环 W/o magnet ring
-S	带磁环 Built-in magnet ring

缸径 Bore size	*A1		*A2		AB	*AC		*AD		B	BA	D	DA	E	EA	H	J	JA	K	KA	KB	M	MA
	-	-S	-	-S		-	-S	-	-S														
12	39	59	44	64	5	34	54	17	27	25	-	6	4	M3x0.5	6	5	6.5	4.5	M5x0.8, Ø4.2 通孔 through	12	16.2	10.2	1
16	42.5	62.5	48	68	5.5	37	57	18.5	28.5	29	-	6	4	M3x0.5	6	5	6.5	4.5	M5x0.8, Ø4.2 通孔 through	12	19.8	11	1.5
20	44.5	64.5	50	70	5.5	39	59	19.5	29.5	34	36	8	4	M4x0.7	8	6	6.5	4.5	M5x0.8, Ø4.2 通孔 through	14	24	13	1.5
25	48	68	54	74	6	42	62	21	31	40	42	10	4	M5x0.8	10	8	8.2	5.5	M6x1.0, Ø4.6 通孔 through	15	28	17	2
32	56	76	63	83	7	49	69	24.5	34.5	44	50	12	4	M6x1.0	12	10	8.2	5.5	M6x1.0, Ø4.6 通孔 through	16	34	22	2.5
40	59	79	66	86	7	52	72	26	36	52	58.5	16	4	M8x1.25	12	14	10	7.5	M8x1.25, Ø6.5 通孔 through	20	40	28	3
50	65	85	74	94	9	56	76	28	38	62	71.5	20	5	M10x1.5	15	17	11	8.5	M8x1.25, Ø6.5 通孔 through	25	48	38	4
63	73	93	82	102	9	64	84	32	42	75	84.5	20	5	M10x1.5	15	17	11	8.5	M8x1.25, Ø6.5 通孔 through	25	60	40	4
80	93	113	104	124	11	82	102	41	51	94	104	25	6	M14x1.5	20	22	14	10.5	M12x1.75, Ø9.2 通孔 through	25	74	45	5
100	114	134	126	146	12	102	122	51	61	114	124	32	7	M18x1.5	20	27	17.5	13	M14x2.0, Ø11.3 通孔 through	30	90	55	5

ARK

ISO21287标准薄型气缸
ISO 21287 Standard Compact Air Cylinder
Series ADN/AEN (Ø12~Ø125)

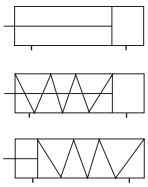

规格 Specifications

缸径 Bore size (mm)		12	16	20	25	32	40	50	63	80	100	125
接管口径 Port size		M5x0.8				G1/8						G1/4
使用流体 Fluid		过滤压缩空气 Filtered compressed air										
动作形式 Action		双动 / 单动 Double acting/ Single acting										
保证耐压力 Proof pressure (MPa)		1.5										
使用压力范围 Operating pressure range (MPa)	双动 Double acting	0.1~1.0										
	单动 Single acting	0.2~1.0										
环境及流体温度 Ambient and fluid temperature		-5~60°C (未冻结 No freezing)										
活塞速度 Piston speed	双动 Double acting	30~500 mm/s										
	单动 Single acting	50~500 mm/s										
缓冲 Cushion		橡胶缓冲 Rubber bumper, 气缓冲 Air cushion										
行程公差 Stroke tolerance (mm)		~150 $^{+1.0}_{0}$				151~ $^{+1.4}_{0}$						
* 润滑 Lubrication		不需要 Not required										

* 如需要润滑请使用透平 1 号油 ISOVG32。Please use Turbine oil 1st Grade ISOVG32 if necessary.

行程 / 磁性开关 Stroke/ Auto switch

缸径 Bore size (mm)	标准行程 Standard stroke (mm)		* 中间行程范围 *Middle stroke range (mm)		磁性开关 Auto switch	开关固定码 Switch clamp
	双动 Double acting	单动 Single acting	双动 Double acting	单动 Single acting		
12	5, 10, 15, 20, 25, 30, 35, 40, 45, 50	5, 10	1~49	1~9	D-M9BK	PF
16	5, 10, 15, 20, 25, 30, 35, 40, 45, 50, 55, 60, 70, 75	5, 10, 15, 20, 25	1~74	1~24		
20	5, 10, 15, 20, 25, 30, 35, 40, 45, 50, 55, 60, 70, 75, 80, 90, 100		1~99			
25	5, 10, 15, 20, 25, 30, 35, 40, 45, 50, 55, 60, 70, 75, 80, 90, 100, 110, 120, 125, 150		1~149			
32, 40	5, 10, 15, 20, 25, 30, 35, 40, 45, 50, 55, 60, 70, 75, 80, 90, 100, 110, 120, 125, 150, 160, 175, 200		1~199			
50, 63	5, 10, 15, 20, 25, 30, 35, 40, 45, 50, 55, 60, 70, 75, 80, 90, 100, 110, 120, 125, 150, 160, 175, 200, 225, 250		1~249			
80, 100, 125	5, 10, 15, 20, 25, 30, 35, 40, 45, 50, 55, 60, 70, 75, 80, 90, 100, 110, 120, 125, 150, 160, 175, 200, 225, 250, 275, 300		1~299			

* 中间行程的最小间隔为 1mm, 通过在比中间行程长的标准行程缸筒内安装隔板的方式实现。
Middle stroke interval minimum 1 mm is implemented by using spacer in barrel of standard stroke.

3

型号表示方法 How to Order

ADN 50 - 60 - A - P - A - S2

型号 Model

ADN	双动 Double acting
AEN	单动 (弹簧压回) Single acting (Spring return)

缸径 Bore size (mm)

行程 Stroke (mm)

杆端螺纹 Rod end thread

A	杆端外螺纹 Rod end male thread
I	杆端内螺纹 Rod end female thread

缓冲 Cushion

P	橡胶缓冲 Rubber bumper

磁环 Magnet

-	无 None
A	内置磁环 Built-in magnet

类型 Type

S2	双活塞杆 (ADN) Double rod (ADN)
Z	单动 (弹簧压出) (AEN) Single acting (Spring extend) (AEN)

ISO21287薄型气缸
ISO 21287 Compact Air Cylinder
Series ADN/AEN

外形尺寸图 Dimensions (mm)

ADN

Ø12

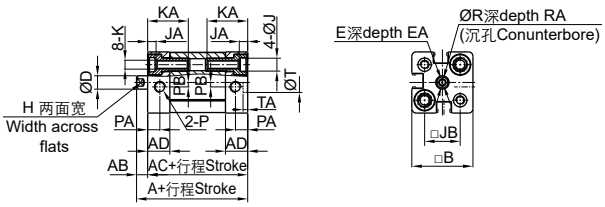

Ø16~Ø25

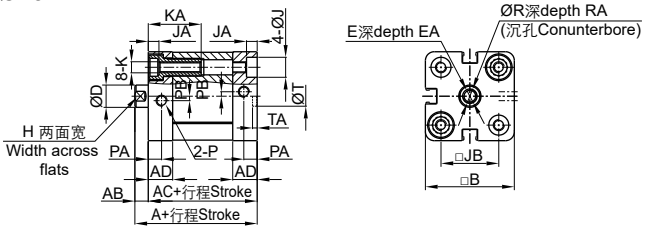

Ø32~Ø63

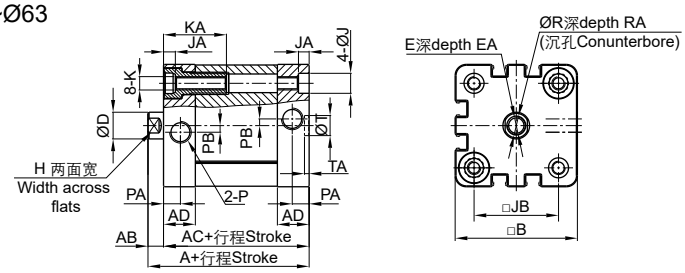

Ø80~Ø125

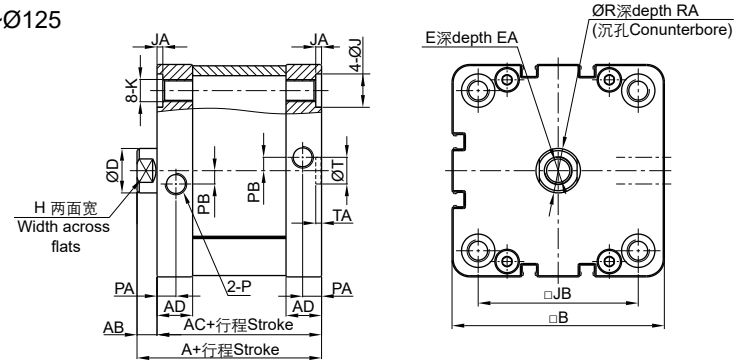

AEN

Ø12~Ø100

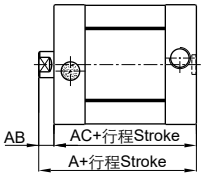

AEN-Z

Ø12~Ø100

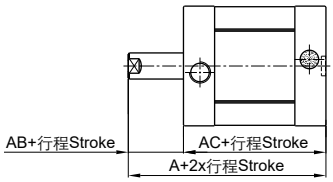

ADN-S2

Ø12~Ø125

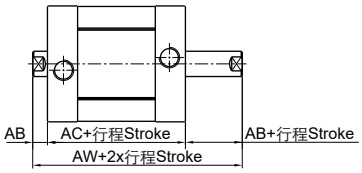

** 未注尺寸与基本型相同。
Dimensions unmentioned are same as the Basic type.

ADN-A
AEN-A

Ø12~Ø125

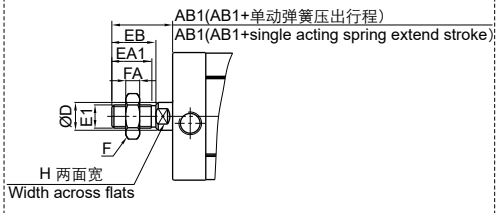

缸径 Bore size	A	A1	AB	AB1	AC	AD	B	D	E	E1	EA	EA1	EB	F	H	J	JA	JB	K	KA	P	PA	PB	R	RA	T	TA
12	40	45	5	15	35	10	27.5	6	M3x0.5	M5x0.8	8	9	10	8	5	6	3.5	16	M4x0.7	18.5	M5x0.8	5.5	2	3.5	1.5	9	2.1
16	40	45	5	17	35	10	30	8	M4x0.7	M6x1.0	10	11	12	10	7	6	3.5	18	M4x0.7	18.5	M5x0.8	5.5	2	4.5	1.5	9	2.1
20	43	49	6	22	37	10.5	35.5	10	M6x1.0	M8x1.25	14	15	16	12	9	9	4.5	22	M5x0.8	23.5	M5x0.8	6	2	6.5	2.5	9	2.1
25	45	51	6	22	39	11	40	10	M6x1.0	M8x1.25	14	15	16	12	9	9	4.5	26	M5x0.8	23.5	M5x0.8	6	2	6.5	2.5	9	2.1
32	51	58	7	26	44	14	49.5	12	M8x1.25	M10x1.25	16	17	19	17	10	9	4.5	32.5	M6x1.0	28.5	G1/8	7.5	3	8.5	3.5	9	2.1
40	52.5	59.5	7	26	45.5	14.5	55	12	M8x1.25	M10x1.25	16	17	19	17	10	9	4.5	38	M6x1.0	28.5	G1/8	7.5	3	8.5	3.5	9	2.1
50	53.5	61.5	8	30	45.5	14.5	65.5	16	M10x1.5	M12x1.25	20	20	22	17	13	11	4.5	46.5	M8x1.25	30.5	G1/8	7.5	3	10.5	4.5	12	2.6
63	57	65	8	30	49	15	75.5	16	M10x1.5	M12x1.25	20	20	22	17	13	11	4.5	56.5	M8x1.25	30.5	G1/8	7.5	4	10.5	4.5	12	2.6
80	63	72	9	37	54	16	95.5	20	M12x1.75	M16x1.5	20	26	28	23	17	15	2.5	72	M10x1.5	-	G1/8	8.5	6	12.5	6	12	2.6
100	76	85	9	37	67	19	113.5	20	M12x1.75	M16x1.5	20	26	28	23	17	15	2.5	89	M10x1.5	-	G1/8	10.5	7	12.5	6	12	2.6
125	92	103	11	51	81	20	134.5	25	M16x2.0	M20x1.5	25	38	40	26	21	-	-	110	M12x1.75	-	G1/4	10.5	8	16.5	7	12	2.6

外形尺寸图 Dimensions (mm)

脚座Foot HNA

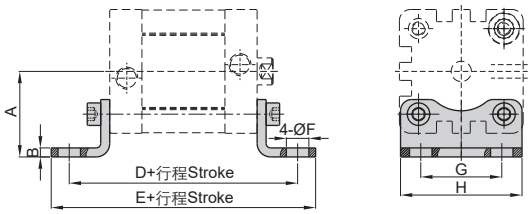

零件号 Part No.	缸径 Bore size	A	B	D	E	F	G	H
HNA-12	12	21	3	61	71	5.5	16	25
HNA-16	16	22	3	61	70.6	5.5	18	27
HNA-20	20	27	3.8	69	81.6	6.5	22	34
HNA-25	25	29	3.8	71	83.6	6.5	26	38
HNA-32	32	33.5	5	76	89	7	32	46
HNA-40	40	38	5	81.5	97.5	9	36	52
HNA-50	50	45	5	87.5	103.5	9	45	65
HNA-63	63	50	5	91	107	9	50	75
HNA-80	80	63	6	106	127	12	63	95
HNA-100	100	74	6	121	146	14	75	114

法兰Flange FNC

Ø12~Ø25

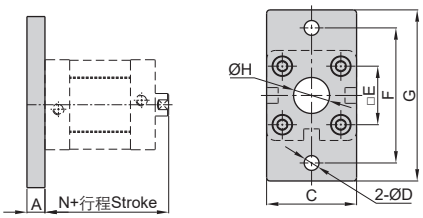

Ø32~Ø125

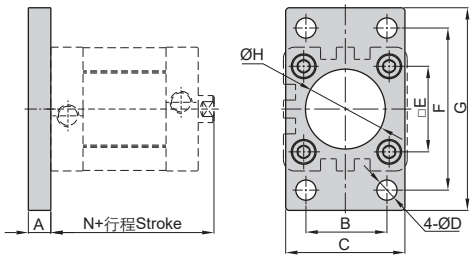

零件号 Part No.	缸径 Bore size	A	B	C	D	E	F	G	H	N
FNC-12	12	8	-	25	5.5	16	40	55	10	40
FNC-16	16	8	-	30	5.5	18	43	55	10	40
FNC-20	20	8	-	35	6.6	22	55	68	16	43
FNC-25	25	8	-	39.5	6.6	26	60	76	16	45
FNC-32	32	10	32	47	7	32.5	64	80	30.5	51
FNC-40	40	10	36	53	9	38	72	90	35.5	52.5
FNC-50	50	12	45	65	9	46.5	90	108	40.5	53.5
FNC-63	63	12	50	75	9	56.5	100	118	45.5	57
FNC-80	80	16	63	95	12.5	72	126	150	45.5	63
FNC-100	100	16	75	115	14.5	89	150	176	55.5	76
FNC-125	125	20	90	139	16.5	110	180	218	60.5	92

单U型钩Single clevis SNCL

Ø12~Ø25

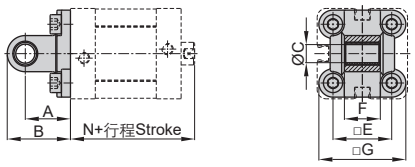

Ø32~Ø125

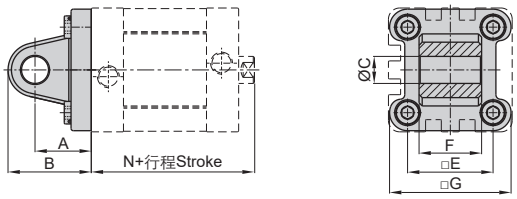

零件号 Part No.	缸径 Bore size	A	B	C	E	F	G	N
SNCL-12	12	16	22	6	16	11.9	24	40
SNCL-16	16	16	22	6	18	11.9	28.5	40
SNCL-20	20	20	28	8	22	15.9	34.5	43
SNCL-25	25	20	28	8	26	15.9	38.5	45
SNCL-32	32	22	32.5	10	32.5	25.8	46.5	51
SNCL-40	40	25	37	12	38	27.8	54	52.5
SNCL-50	50	27	39	12	46.5	31.7	64	53.5
SNCL-63	63	32	47	16	56.5	39.7	75	57
SNCL-80	80	36	51.5	16	72	49.7	93	63
SNCL-100	100	41	61	20	89	59.7	110	76
SNCL-125	125	50	74	25	110	69.7	134	92

单U型钩接座Single clevis bracket LBN

Ø12~Ø25

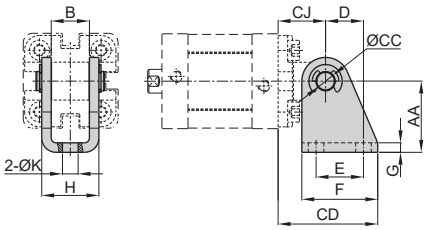

零件号 Part No.	缸径 Bore size	AA	B	CC	CD	CJ	D	E	F	G	H	K
LBN-12/16	12, 16	27	12.1	6	34	16	13	15	25	3	18.1	5.5
LBN-20/25	20, 25	30	16.1	8	42	20	16	20	32	4	24.1	6.6

ISO21287薄型气缸
ISO 21287 Compact Air Cylinder
Series ADN/AEN

外形尺寸图 Dimensions (mm)

双U型钩Double clevis SNCB

Ø32~Ø125

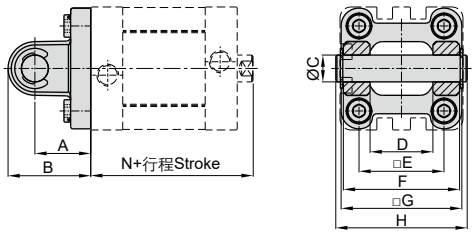

零件号 Part No.	缸径 Bore size	A	B	C	D	E	F	G	H	N
SNCB-32	32	22	32.5	10	26	32.5	45	46.5	51	51
SNCB-40	40	25	37	12	28	38	52	54	59	52.5
SNCB-50	50	27	39	12	32	46.5	60	64	67	53.5
SNCB-63	63	32	47	16	40	56.5	70	75	77	57
SNCB-80	80	36	51.5	16	50	72	90	93	97	63
SNCB-100	100	41	61	20	60	89	110	110	119	76
SNCB-125	125	50	74	25	70	110	130	134	139	92

双U型钩接座Double clevis bracket FC95-E

Ø32~Ø125

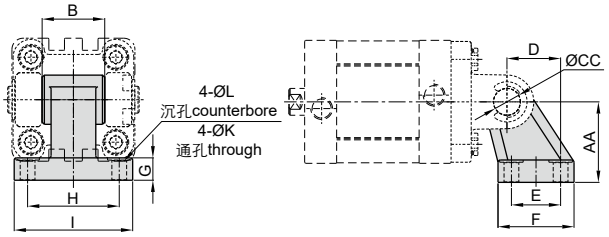

零件号 Part No.	缸径 Bore size	AA	B	CC	D	E	F	G	H	I	K	L
FC95-E3	32	32	26	10	21	18	30	8	38	50	6.6	11
FC95-E4	40	36	28	12	24	22	34	10	41	53	6.6	11
FC95-E5	50	45	32	12	33	30	45	12	50	65	9	14
FC95-E6	63	50	40	16	37	35	50	12	52	67	9	14
FC95-E8	80	63	50	16	47	40	60	14	66	86	11	17
FC95-E10	100	71	60	20	55	50	70	15	76	96	11	17
FC95-E12	125	90	70	25	70	60	90	20	94	124	14	20

轴耳Trunnion ZNCF

Ø32~Ø125

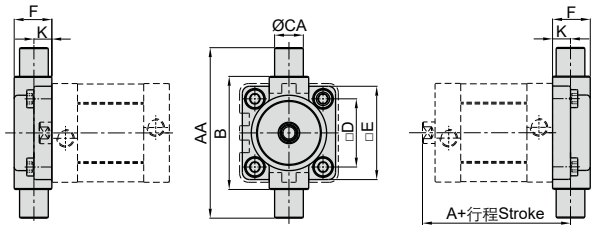

零件号 Part No.	缸径 Bore size	A	AA	B	CA	D	E	F	K
ZNCF-32	32	63	74	50	12	32.5	46	19	10
ZNCF-40	40	66.5	95	63	16	38	52	21	10
ZNCF-50	50	71.5	107	75	16	46.5	64	26	12
ZNCF-63	63	77	130	90	20	56.5	74	28	12
ZNCF-80	80	85	150	110	20	72	94	31	16
ZNCF-100	100	102	185	132	25	89	114	35	16
ZNCF-125	125	124	210	160	25	110	139	43	20

轴耳接座Trunnion bracket LNZG

Ø32~Ø125

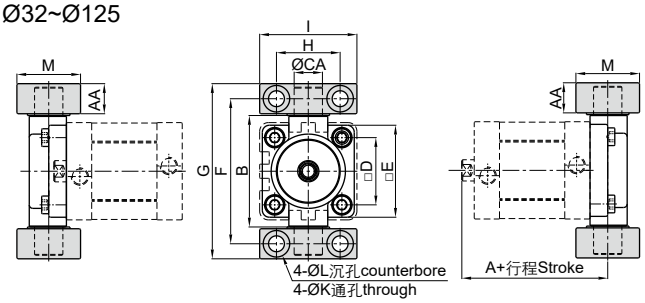

零件号 Part No.	缸径 Bore size	A	AA	B	CA	D	E	F	G	H	I	K	L	M
LNZG-32	32	63	14	52	12	32.5	46	66	80	32	46	11	7	30
LNZG-40/50	40	66.5	17	65	16	38	52	82	99	36	55	15	9	36
LNZG-40/50	50	71.5	17	75	16	46.5	64	94	111	36	55	15	9	36
LNZG-63/80	63	77	20.5	90	20	56.5	74	113.5	134	42	65	18	11	40
LNZG-63/80	80	85	20.5	112	20	72	94	133.5	154	42	65	18	11	40
LNZG-100/125	100	102	24.5	135	25	89	114	159.5	184	50	75	20	14	50
LNZG-100/125	125	124	24.5	170	25	110	139	187.5	212	50	75	20	14	50

ARK

导杆型薄型气缸
Guide Compact Air Cylinder
Series KCQM (Ø12~Ø100)

规格 Specifications

缸径 Bore size (mm)	12	16	20	25	32	40	50	63	80	100
接管口径 Port size Rc(PT)	M5x0.8				1/8		1/4		3/8	
使用流体 Fluid	过滤压缩空气 Filtered compressed air									
动作形式 Action	双动 Double acting									
保证耐压力 Proof pressure (MPa)	1.5									
使用压力范围 Operating pressure range (MPa)	0.12~1.0		0.1~1.0							
环境及流体温度 Ambient and fluid temperature	-5~60℃ (未冻结 No freezing)									
活塞速度 Piston speed (mm/s)	50~500						50~300			
缓冲 Cushion	橡胶缓冲 Rubber bumper									
行程公差 Stroke tolerance (mm) (mm)	$^{+1.0}_{0}$									
* 润滑 Lubrication	不需要 Not required									
活塞杆不回转精度 Rod non-rotating accuracy	±0.2°		±0.1°							

* 如需要润滑请使用透平 1 号油 ISOVG32。Please use Turbine oil 1st Grade ISOVG32 if necessary.

行程 / 磁性开关 Stroke/ Auto switch

缸径 Bore size (mm)	标准行程 Standard stroke (mm)	* 中间行程 Middle stroke (mm) 范围 Range	间隔 Interval	磁性开关 / 轨道安装 Auto switch/ Rail mounting
12, 16	5, 10, 15, 20, 25, 30	1~29	1	D-M9BK
20, 25	5, 10, 15, 20, 25, 30, 35, 40, 45, 50	1~49	1	
32	5, 10, 15, 20, 25, 30, 35, 40, 45, 50, 75, 100	1~99	1	
40		5~95	5	
50, 63, 80, 100	10, 15, 20, 25, 30, 35, 40, 45, 50, 75, 100			

* 中间行程通过在比中间行程长的标准行程缸筒内安装隔板的方式实现。Middle stroke is implemented by using spacer in barrel of standard stroke.

型号表示方法 How to Order

KC [D] QM [A] [40] - [30]

磁环 Magnet

-	无 None
D	内置磁环 Built-in magnet

安装形式 Mounting

B	通孔式 Through-hole
A	两端螺孔式 Both ends tapped (Ø32-Ø100)

缸径 Bore size (mm)

行程 Stroke (mm)

3

导杆型薄型气缸
Guide Compact Air Cylinder
Series KCQM

外形尺寸图 Dimensions (mm)

Ø12~Ø25

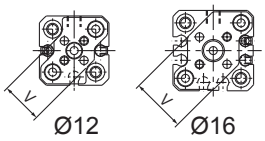

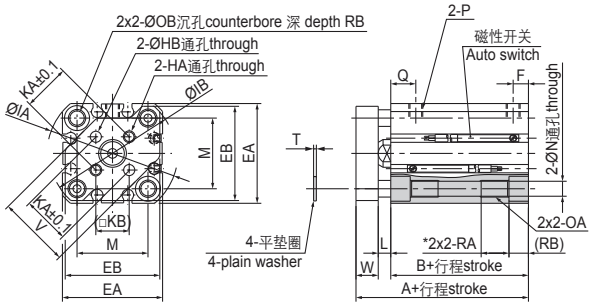

Ø20, Ø25

Ø32~Ø50

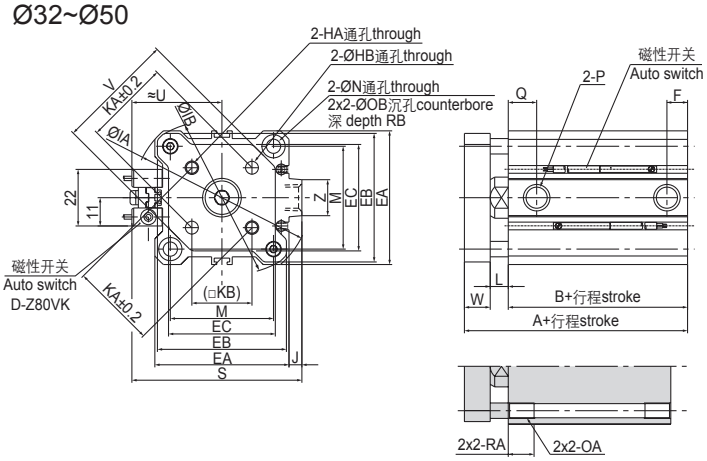

两端螺孔型KCQMA

Ø63~Ø100

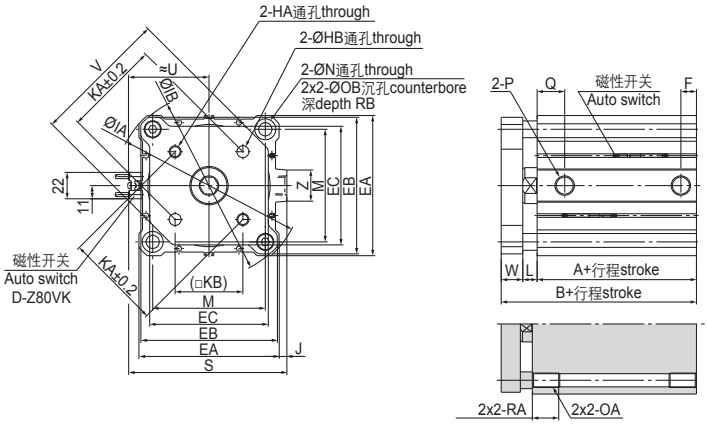

两端螺孔型KCQMA

* 除了以下列出的缸径/行程，其余参见总尺寸表。
Except the following bore size/ stroke, the others refer to the dimension table.

缸径 Bore size	行程 Stroke		RA
	KCQM	KCDQM	
12	5	-	通孔螺纹 Threaded through
16	5	-	
20	5~15	5	
25	5, 10	-	

缸径 Bore size	行程范围 Stroke range	A	B	EA	EB	EC	F	HA	HB	IA	IB	J	KA	KB	L	M	N	OA	OB	P	Q	RA	RB	S	T	U	V	W	Z
12	5~30	26.5(31.5)	17(22)	25	24	-	5	M3x0.5	$3^{+0.2}_{0}$	32	31.5	-	10	7.1	3.5	15.5	3.5	M4x0.7	6.5	M5x0.8	7.5	7	4	-	0.5	-	14.9	6	-
16	5~30	26.5(31.5)	17(22)	29	28	-	5	M3x0.5	$3^{+0.2}_{0}$	38	37	-	14	9.9	3.5	20	3.5	M4x0.7	6.5	M5x0.8	7.5	7	4	-	0.5	-	20	6	-
20	5~50	32(42)	19.5(29.5)	36	34	-	5.5	M4x0.7	$4^{+0.2}_{0}$	47	45.5	-	17	12	4.5	25.5	5.4	M6x1.0	9	M5x0.8	9	10	7	-	1	-	26	8	-
25	5~50	35.5(45.5)	22.5(32.5)	40	38	-	5.5	M5x0.8	$5^{+0.2}_{0}$	52	50.5	-	22	15.6	5	28	5.4	M6x1.0	9	M5x0.8	11	10	7	-	1	-	30	8	-
32	5	40(50)	23(33)	45	43	34.4	5.5	M5x0.8	$5^{+0.2}_{0}$	60	58.5	4.5	28	19.8	7	34	5.5	M6x1.0	9	M5x0.8 (1/8)	11.5 (10.5)	10	7	58.5	-	31.5	38	10	14
	10~50						7.5													1/8	10.5								
	75, 100	50	33																										
40	5~50	46.5(56.5)	29.5(39.5)	52	50	41.4	8	M5x0.8	$5^{+0.2}_{0}$	69	67.5	5	33	23.3	7	40	5.5	M6x1.0	9	1/8	11	10	7	66	-	35	46	10	14
	75, 100	56.5	39.5																										
50	10~50	50.5(60.5)	30.5(40.5)	64	62	53.4	10.5	M6x1.0	$6^{+0.2}_{0}$	86	84.5	7	42	29.7	8	50	6.6	M8x1.25	11	1/4	10.5	14	8	80	-	41	58	12	19
	75, 100	60.5	40.5																										
63	10~50	56(66)	36(46)	77	74	59.6	10.5	M6x1.0	$6^{+0.2}_{0}$	103	100	7	50	35.4	8	60	9	M10x1.5	14	1/4	15	18	10.5	93	-	47.5	69	12	19
	75, 100	66	46																										
80	10~50	67.5(77.5)	43.5(53.5)	98	95	79.5	12.5	M8x1.25	$8^{+0.2}_{0}$	132	129	6	65	46	10	77	11	M12x1.75	17.5	3/8	16	22	13.5	112.5	-	57.5	89	14	26
	75, 100	77.5	53.5																										
100	10~50	79(89)	53(63)	117	114	99	13	M10x1.5	$10^{+0.2}_{0}$	156	153	6.5	80	56.6	10	94	11	M12x1.75	17.5	3/8	23	22	13.5	132.5	-	67.5	113	16	26
	75, 100	89	63																										

** ( ) 内为带磁环的尺寸。( ) shows dimensions of the model with built-in magnet.

ARK 微型导杆气缸
Miniature Guide Air Cylinder
Series KMGJ (Ø6, Ø10)

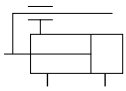

规格 Specifications

缸径 Bore size (mm)	6	10
接管口径 Port size Rc(PT)	M3x0.5	
使用流体 Fluid	过滤压缩空气 Filtered compressed air	
动作形式 Action	双动 Double acting	
保证耐压力 Proof pressure (MPa)	1.05	
使用压力范围 Operating pressure range (MPa)	0.15~0.7	
环境及流体温度 Ambient and fluid temperature	-5~60℃ (未冻结 No freezing)	
活塞速度 Piston speed	*1) 50~500 mm/s	
缓冲 Cushion	橡胶缓冲 Rubber bumper	
行程公差 Stroke tolerance (mm)	$^{+1.0}_{0}$	
活塞杆不回转精度 Rod non-rotating accuracy	±0.1°	
*2) 润滑 Lubrication	不需要 Not required	

*1) 仅限允许动能的范围。Within allowable kinetic energy use only.
2) 如需要润滑请使用透平 1 号油 ISOVG32。Please use Turbine oil 1st Grade ISOVG32 if necessary.

行程 / 磁性开关 Stroke/ Auto switch

缸径 Bore size (mm)	标准行程 Standard stroke (mm)	*1) 中间行程 Middle stroke (mm)		*2) 磁性开关 Auto switch	开关固定码 Switch clamp
		范围 Range	间隔 Interval		
6	5, 10, 15	1~14	1	KT-38	-
10	5, 10, 15, 20	1~19	1		

*1) 中间行程通过在比中间行程长的标准行程缸筒内安装隔板的方式实现。
Middle stroke is implemented by using spacer in barrel of standard stroke.
2) 安装磁性开关的最小行程为 4mm。The minimum auto switch mounting stroke is 4 mm.

3

型号表示方法 How to Order

KMGJ 10 - 15

- 15: 行程 Stroke (mm)
- 10: 缸径 Bore size (mm)

微型导杆气缸
Miniature Guide Air Cylinder
Series KMGJ

外形尺寸图 Dimensions (mm)

KMGJ6

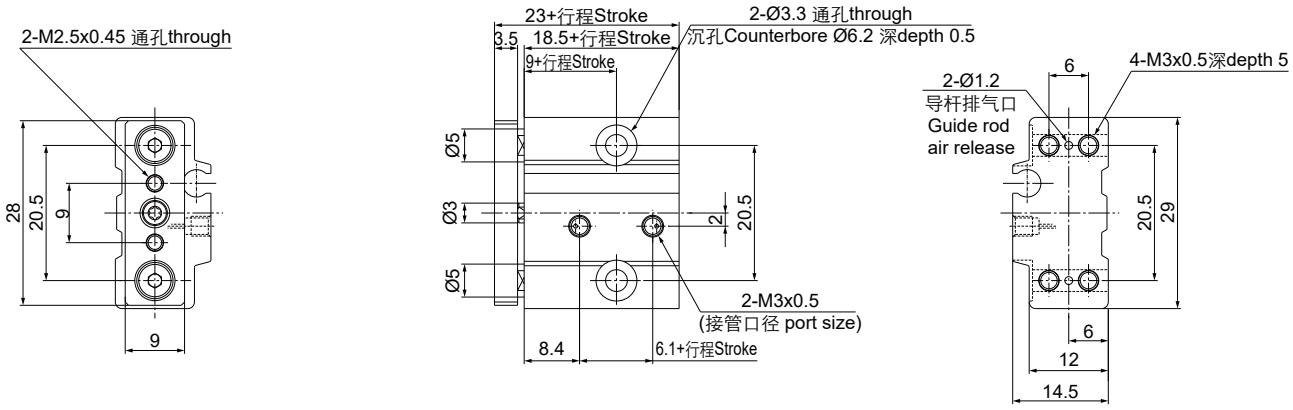

KMGJ10

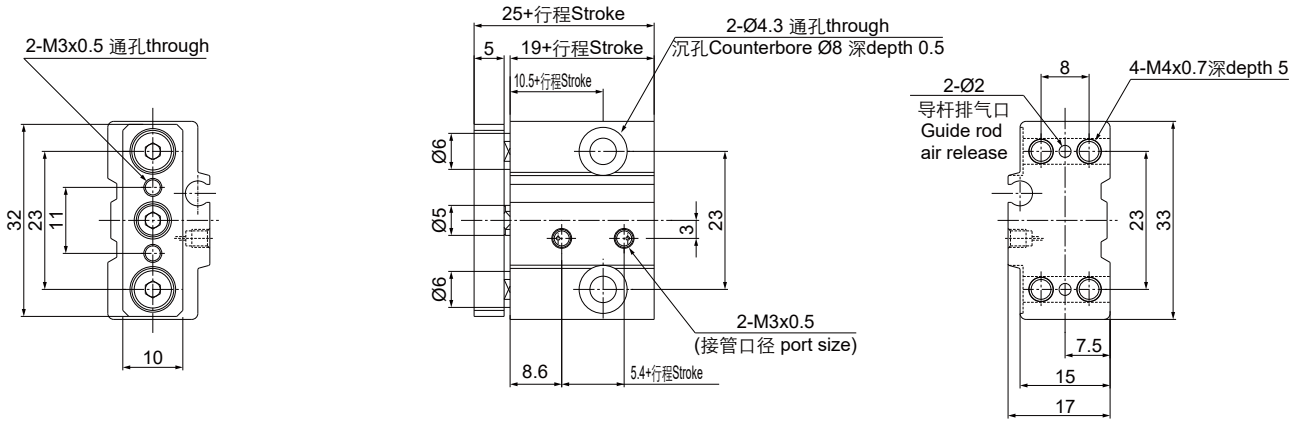

3

ARK

导杆气缸
Guide Air Cylinder
Series KMGPM/L (Ø12~Ø63)

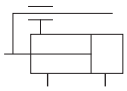

规格 Specifications

缸径 Bore size (mm)		12	16	20	25	32	40	50	63
接管口径 Port size Rc(PT)		M5x0.8		1/8				1/4	
使用流体 Fluid		过滤压缩空气 Filtered compressed air							
动作形式 Action		双动 Double acting							
保证耐压力 Proof pressure (MPa)		1.5							
使用压力范围 Operating pressure range (MPa)		0.1~1.0							
环境及流体温度 Ambient and fluid temperature		-5~60℃ (未冻结 No freezing)							
活塞速度 Piston speed		50~500 mm/s							
缓冲 Cushion		橡胶缓冲 Rubber bumper							
行程公差 Stroke tolerance (mm)		$^{+1.5}_{0}$							
活塞杆不回转精度 Rod non-rotating accuracy	滑动轴承 Slide bearing	±0.10°		±0.09°		±0.08°		±0.06°	
	滚动导向轴承 Ball bushing bearing	±0.08°		±0.07°		±0.06°		±0.05°	
* 润滑 Lubrication		不需要 Not required							

* 如需要润滑请使用透平 1 号油 ISOVG32。Please use Turbine oil 1st Grade ISOVG32 if necessary.

行程 / 磁性开关 Stroke/ Auto switch

缸径 Bore size (mm)	标准行程 Standard stroke (mm)	* 中间行程 Middle stroke (mm)		磁性开关 Auto switch	开关固定码 Switch clamp
		范围 Range	间隔 Interval		
12, 16	10, 20, 30, 40, 50, 75, 100	1~99	1	D-M9BK	PS
20, 25	20, 30, 40, 50, 75, 100, 125, 150, 175, 200	1~199	1		
32	25, 50, 75, 100, 125, 150, 175, 200	1~199	1		
40, 50, 63	25, 50, 75, 100, 125, 150, 175, 200	5~195	5		

* 中间行程通过在比中间行程长的标准行程缸筒内安装隔板的方式实现。
Middle stroke is implemented by using spacer in barrel of standard stroke.

3

型号表示方法 How to Order

KMGP **M** **25** - **40**

- 40 → 行程 Stroke (mm)
- 25 → 缸径 Bore size (mm)
- M → 轴承 Bearing

M	滑动轴承 Slide bearing
L	滚动导向轴承 Ball bushing bearing

导杆气缸
Guide Air Cylinder
Series KMGPM/L

外形尺寸图 Dimensions (mm)

KMGPM/L

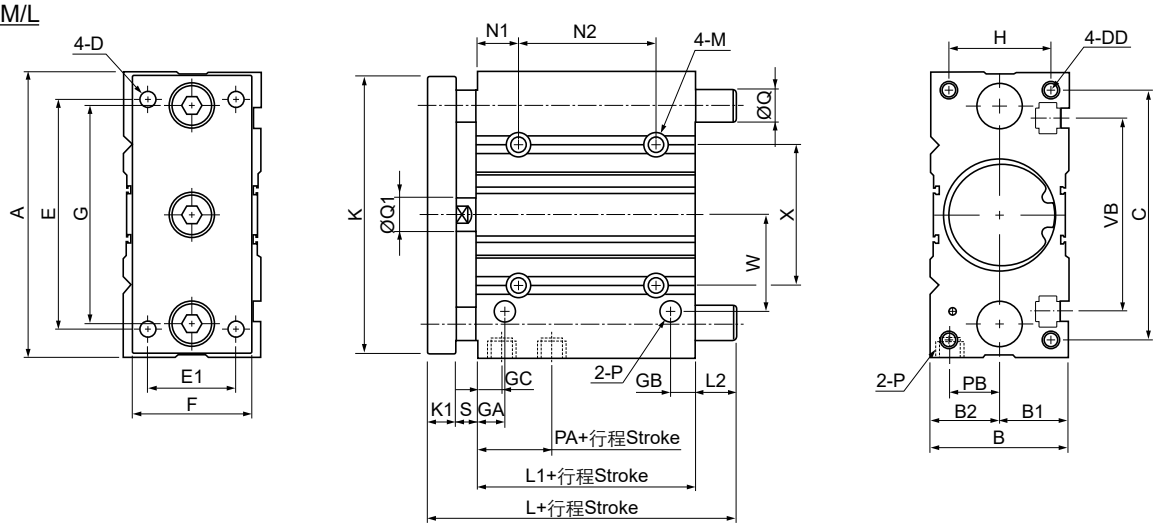

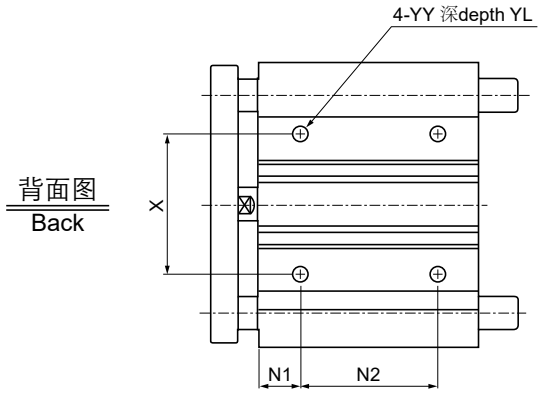

缸径 Bore size	KMGPM							KMGPL						
	ST ≤ 50		50 < ST ≤ 100		100 < ST ≤ 200		Q	ST ≤ 50		50 < ST ≤ 100		100 < ST ≤ 200		Q
	L	L2	L	L2	L	L2		L	L2	L	L2	L	L2	
12	42	0	60.5	18.5	-	-	8	43	1	55	13	-	-	6
16	46	0	64.5	18.5	-	-	10	49	3	65	19	-	-	8
20	53	0	77.5	24.5	77.5	24.5	12	59	6	76	23	100	47	10
25	53.5	0	77.5	24	77.5	24	16	65.5	12	81.5	28	100.5	47	13

缸径 Bore size	KMGPM					KMGPL						
	ST ≤ 50		50 < ST ≤ 200		Q	ST ≤ 50		50 < ST ≤ 100		100 < ST ≤ 200		Q
	L	L2	L	L2		L	L2	L	L2	L	L2	
32	75	15.5	93.5	34	20	79.5	20	96.5	37	116.5	57	16
40	75	9	93.5	27.5	20	79.5	13.5	96.5	30.5	116.5	50.5	16
50	88.5	16.5	109.5	37.5	25	91.5	19.5	112.5	40.5	132.5	60.5	20
63	88.5	11.5	109.5	32.5	25	91.5	14.5	112.5	35.5	132.5	55.5	20

缸径 Bore size	A	B	B1	B2	C	D	DD	E	E1	F	G	GA	GB	GC	H	K	K1	L1	P	PA	PB
12	58	26	13	13	50	M4x0.7	M4x0.7 深 depth 10	48	14	22	41	11	7.5	7.5	18	56	8	29	M5x0.8	13	8
16	64	30	15	15	56	M5x0.8	M5x0.8 深 depth 12	54	16	25	46	11	8	8	22	62	8	33	M5x0.8	15	10
20	83	36	18	18	72	M5x0.8	M5x0.8 深 depth 13	70	18	30	54	10.5	8.5	8.5	24	81	10	37	1/8	12.5	10.5
25	93	42	21	21	82	M6x1.0	M6x1.0 深 depth 15	78	26	38	64	11.5	9	9	30	91	10	37.5	1/8	12.5	13.5
32	112	48	24	24	98	M8x1.25	M8x1.25 深 depth 20	96	30	44	78	12.5	9	12.5	34	110	12	37.5	1/8	7	15
40	120	54	27	27	106	M8x1.25	M8x1.25 深 depth 20	104	30	44	86	14	10	14	40	118	12	44	1/8	13	18
50	148	64	32	32	130	M10x1.5	M10x1.5 深 depth 22	130	40	60	110	14	11	12	46	146	16	44	1/4	9	21.5
63	162	78	39	39	142	M10x1.5	M10x1.5 深 depth 22	130	50	70	124	16.5	13.5	16.5	58	158	16	49	1/4	14	28

缸径 Bore size	M	N1	N2			Q1	S	VB	W	X	YL	YY
			ST ≤ 30	30 < ST ≤ 100	100 < ST ≤ 200							
12	Ø4.3 通孔 through, Ø8 沉孔 counter 深 depth 4.5	5	20	40	-	6	5	37	18	23	10	M5x0.8
16	Ø4.3 通孔 through, Ø8 沉孔 counter 深 depth 4.5	5	24	44	-	8	5	38	19	24	10	M5x0.8
20	Ø5.6 通孔 through, Ø9.5 沉孔 counter 深 depth 5.5	17	24	44	120	10	6	44	25	28	12	M6x1.0
25	Ø5.6 通孔 through, Ø9.5 沉孔 counter 深 depth 5.5	17	24	44	120	12	6	50	28.5	34	12	M6x1.0

缸径 Bore size	M	N1	N2			Q1	S	VB	W	X	YL	YY
			ST ≤ 25	25 < ST ≤ 100	100 < ST ≤ 200							
32	Ø6.6 通孔 through, Ø11 沉孔 counter 深 depth 7.5	21	24	48	124	16	10	63	34	42	16	M8x1.25
40	Ø6.6 通孔 through, Ø11 沉孔 counter 深 depth 7.5	22	24	48	124	16	10	72	38	50	16	M8x1.25
50	Ø8.6 通孔 through, Ø14 沉孔 counter 深 depth 9	24	24	48	124	20	12	92	47	66	20	M10x1.5
63	Ø8.6 通孔 through, Ø14 沉孔 counter 深 depth 9	24	28	52	128	20	12	110	55	80	20	M10x1.5

ARK 导杆气缸
Guide Air Cylinder
Series KMGGM/L (Ø20~Ø100)

规格 Specifications

缸径 Bore size (mm)		20	25	32	40	50	63	80	100
接管口径 Port size Rc(PT)		1/8				1/4		3/8	1/2
使用流体 Fluid		过滤压缩空气 Filtered compressed air							
动作形式 Action		双动 Double acting							
保证耐压力 Proof pressure (MPa)		1.5							
使用压力范围 Operating pressure range (MPa)		0.15~1.0							
环境及流体温度 Ambient and fluid temperature		-5~60℃ (未冻结 No freezing)							
活塞速度 Piston speed (mm/s)		50~1000						50~700	
缓冲 Cushion	基本气缸 Basic cylinder	橡胶缓冲 Rubber bumper							
	导杆部分 Guide unit	内置液压缓冲器 (2 个) Built-in shock absorbers (2 pcs.)							
行程调整范围 (单侧) (内置调整螺钉 (2 个)) Stroke adjusting range (One side) (Built-in adjusting bolts (2 pcs.)) (mm)		0~-10	0~-15						
活塞杆不回转精度 Rod non-rotating accuracy	滑动轴承 Slide bearing	±0.07°	±0.06°	±0.06°	±0.05°	±0.04°	±0.04°	±0.04°	±0.03°
	滚动导向轴承 Ball bushing bearing	±0.06°	±0.05°	±0.04°	±0.04°	±0.04°	±0.03°	±0.03°	±0.02°
* 润滑 Lubrication		不需要 Not required							

* 如需要润滑请使用透平 1 号油 ISOVG32。Please use Turbine oil 1st Grade ISOVG32 if necessary.

行程 / 磁性开关 Stroke/ Auto switch

缸径 Bore size (mm)	标准行程 Standard stroke (mm)	长行程 Long stroke (mm)	磁性开关 Auto switch	开关固定码 Switch clamp
20	75, 100, 125, 150, 200	250, 300, 350, 400	D-M9BK	PBC-A20
25	75, 100, 125, 150, 200, 250, 300	350, 400, 450, 500		PBC-A25
32		350, 400, 450, 500, 600		PBC-A32
40		350, 400, 450, 500, 600, 700, 800		PBC-A40
50		350, 400, 450, 500, 600, 700, 800, 900, 1000		PBC-A50
63		350, 400, 450, 500, 600, 700, 800, 900, 1000, 1100		PBC-A63
80		350, 400, 450, 500, 600, 700, 800, 900, 1000, 1100, 1200		PBC-A80
100		350, 400, 450, 500, 600, 700, 800, 900, 1000, 1100, 1200, 1300		PBC-A100

型号表示方法 How to Order

KMGG M B 25 - 200

- 行程 Stroke (mm): 200
- 缸径 Bore size (mm): 25
- 安装形式 Mounting type: B
- 轴承 Bearing: M

轴承 Bearing

M	滑动轴承 Slide bearing
L	滚动导向轴承 Ball bushing bearing

安装形式 Mounting type

B	基本型 Basic
F	前面法兰安装 Front flange mounting

导杆气缸
Guide Air Cylinder
Series KMGGM/L

外形尺寸图 Dimensions (mm)

KMGGM/LB (Ø20~Ø50)

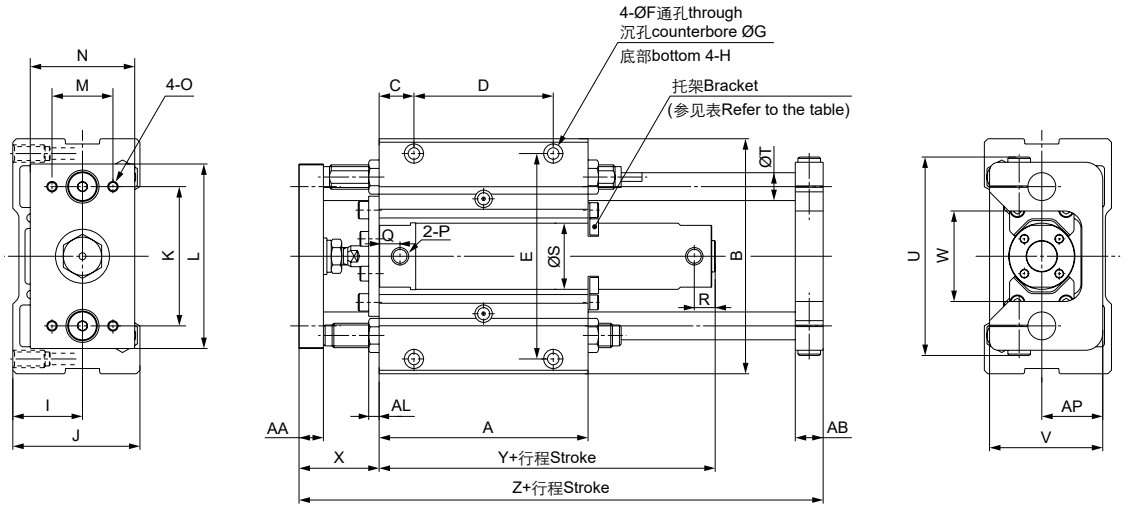

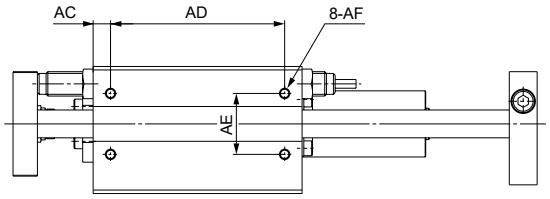

缸径 Bore size	行程 stroke	A	AA	AB	AC	AD	AE	AF	AL	AP	B	C	D	E	F	G	H	I
20	75, 100, 125, 150, 200	90	11	11	7.5	75	30	M5x0.8 深 depth 10	6	25	108	15	60	92	5.5	9.5 深 depth 6	M8x1.25 深 depth 14	30
25	75, 100, 125, 150, 200, 250, 300	100	14	13	7.5	85	30	M6x1.0 深 depth 12	6	30	130	17.5	65	113	6.6	11 深 depth 8	M10x1.5 深 depth 18	35
32		120	14	16	10	100	35	M6x1.0 深 depth 12	6	35	135	20	80	118	6.6	11 深 depth 8	M10x1.5 深 depth 18	40
40		140	17	19	10	120	40	M8x1.25 深 depth 16	9	45	170	20	100	150	9	14 深 depth 10	M12x1.75 深 depth 21	50
50		170	23	21	10	150	45	M10x1.5 深 depth 20	9	50	194	25	120	170	11	17 深 depth 12	M14x2 深 depth 25	55

缸径 Bore size	J	K	L	M	N	O	P	Q	R	S	T	U	V	W	X	Y	Z
20	55	60	80	25	45	M6x1.0 深 depth 9	1/8	12	12	26	12	82	48	40	39	71	157
25	65	70	100	35	54	M6x1.0 深 depth 13	1/8	12	12	31	13	100	57	46	46	71	175
32	73	80	106	35	60	M6x1.0 深 depth 13	1/8	12	12	38	16	114	65	52	46	73	201
40	93	95	134	50	75	M8x1.25 深 depth 16	1/8	13	12	47	20	138	84	62	56	80	238
50	103	115	152	56	90	M10x1.5 深 depth 21	1/4	14	14	58	25	164	94	75	67	92	285

长行程 Long Stroke

缸径 Bore size	行程 stroke	R	Y
20	250~400	14	79
25	350~500	14	79
32	350~600	14	81
40	350~800	15	89
50	350~1000	16	104

安装托架行程 Bracket Mounting Stroke

缸径 Bore size	ST ≥
20	100
25	125
32	150
40	200
50	250

3

导杆气缸
Guide Air Cylinder
Series KMGGM/L

外形尺寸图 Dimensions (mm)

KMGGM/LB (Ø63~Ø100)

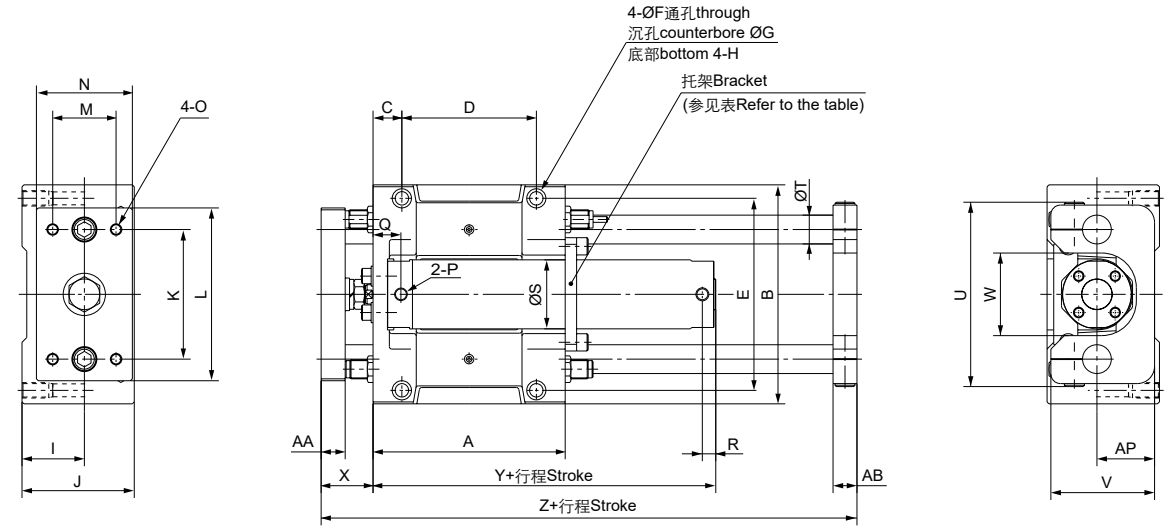

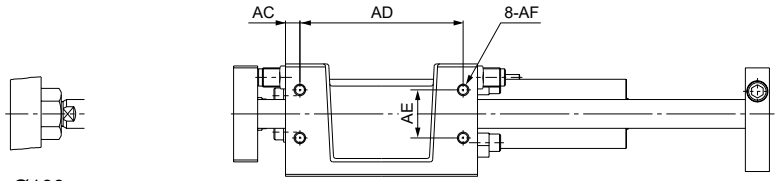

Ø100
活塞杆端部连接
piston rod end connection

3

缸径 Bore size	行程 stroke	A	AA	AB	AC	AD	AE	AF	AP	B	C	D	E	F	G	H	I
63	75, 100, 125, 150, 200, 250, 300	200	25	25	15	170	50	M12x1.75 深 depth 24	60	228	30	140	200	13.5	20 深 depth 14.5	M16x2 深 depth 28	65
80		230	30	27	15	200	55	M12x1.75 深 depth 24	70	262	30	170	234	13.5	20 深 depth 14.5	M16x2 深 depth 28	75
100		280	32	30	17.5	245	70	M14x2 深 depth 28	80	304	35	210	274	15	23 深 depth 17	M18x2.5 深 depth 32	85

缸径 Bore size	J	K	L	M	N	O	P	Q	R	S	T	U	V	W	X	Y	Z
63	117	135	180	66	100	M12x1.75 深 depth 23	1/4	29	14	72	30	192	108	86	54	107	308
80	138	160	214	76	115	M12x1.75 深 depth 28	3/8	40	19	89	35	224	128	104	66	131	355
100	153	190	245	80	125	M14x2 深 depth 30	1/2	40	19	110	40	262	143	128	66	131	410

长行程 Long Stroke

缸径 Bore size	行程 stroke	R	Y
63	350~1100	16	119
80	350~1200	23	145
100	350~1300	23	145

安装托架行程 Bracket Mounting Stroke

缸径 Bore size	ST ≥
63	300
80	400
100	500

导杆气缸
Guide Air Cylinder
Series KMGGM/L

外形尺寸图 Dimensions (mm)

KMGGM/LF (Ø20~Ø50)

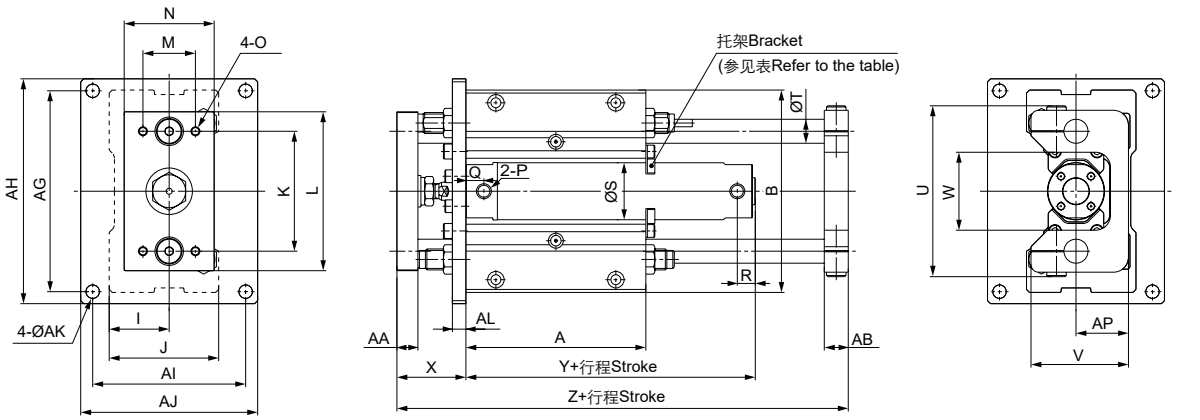

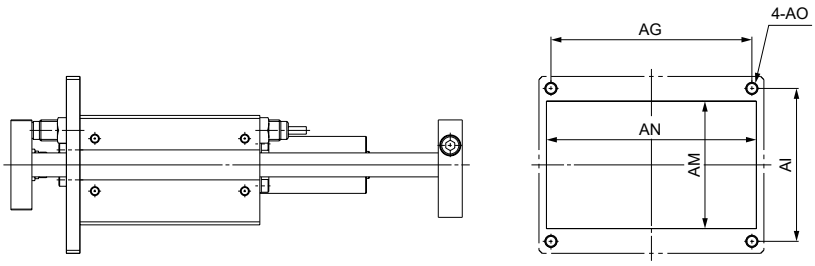

安装座寸
Mounting dimensions

缸径 Bore size	行程 stroke	A	AA	AB	AG	AH	AI	AJ	AK	AL	AM	AN	AO	AP	B	I	J	K	L	M	N	O
20	75, 100, 125, 150, 200	90	11	11	112	125	82	95	6.6	9	65	115	M6	25	108	30	55	60	80	25	45	M6x1.0 深 depth 9
25	75, 100, 125, 150, 200, 250, 300	100	14	13	134	150	92	108	9	9	75	135	M8	30	130	35	65	70	100	35	54	M6x1.0 深 depth 13
32		120	14	16	134	150	102	118	9	9	85	140	M8	35	135	40	73	80	106	35	60	M6x1.0 深 depth 13
40		140	17	19	170	186	134	150	9	12	105	175	M8	45	170	50	93	95	134	50	75	M8x1.25 深 depth 16
50		170	23	21	190	210	140	160	11	12	115	200	M10	50	194	55	103	115	152	56	90	M10x1.5 深 depth 21

缸径 Bore size	P	Q	R	S	T	U	V	W	X	Y	Z
20	1/8	12	12	26	12	82	48	40	39	71	157
25	1/8	12	12	31	13	100	57	46	46	71	175
32	1/8	12	12	38	16	114	65	52	46	73	201
40	1/8	13	12	47	20	138	84	62	56	80	238
50	1/4	14	14	58	25	164	94	75	67	92	285

长行程 Long Stroke

缸径 Bore size	行程 stroke	R	Y
20	250~400	14	79
25	350~500	14	79
32	350~600	14	81
40	350~800	15	89
50	350~1000	16	104

安装托架行程
Bracket Mounting Stroke

缸径 Bore size	ST ≥
20	100
25	125
32	150
40	200
50	250

3

导杆气缸
Guide Air Cylinder
Series KMGGM/L

外形尺寸图 Dimensions (mm)

KMGGM/LF (Ø63~Ø100)

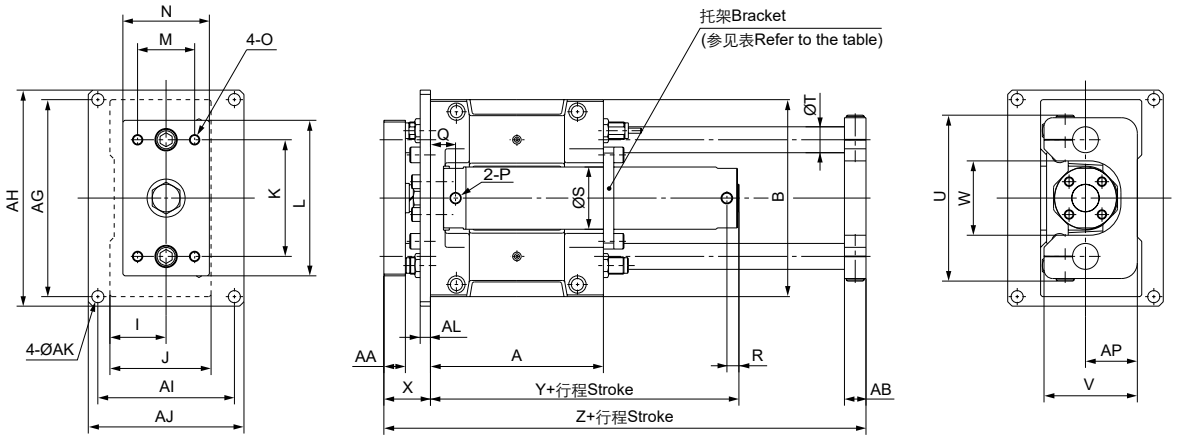

Ø100
活塞杆端部连接
piston rod end connection

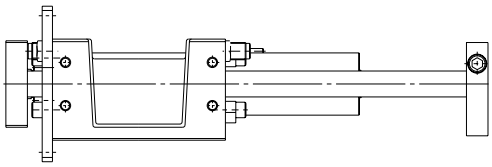

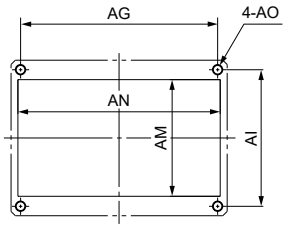

安装座寸
Mounting dimensions

3

缸径 Bore size	行程 stroke	A	AA	AB	AG	AH	AI	AJ	AK	AL	AM	AN	AO	AP	B	I	J	K	L	M	N	O
63	75, 100, 125, 150, 200, 250, 300	200	25	25	228	250	158	180	14	12	135	234	M12	60	228	65	117	135	180	66	100	M12x1.75 深 depth 23
80		230	30	27	262	284	178	200	14	16	155	268	M12	70	262	75	138	160	214	76	115	M12x1.75 深 depth 28
100		280	32	30	300	326	200	226	16	16	175	310	M14	80	304	85	153	190	245	80	125	M14x2 深 depth 30

缸径 Bore size	P	Q	R	S	T	U	V	W	X	Y	Z
63	1/4	29	14	72	30	192	108	86	54	107	308
80	3/8	40	19	89	35	224	128	104	66	131	355
100	1/2	40	19	110	40	262	143	128	66	131	410

长行程 Long Stroke

缸径 Bore size	行程 stroke	R	Y
63	350~1100	16	119
80	350~1200	23	145
100	350~1300	23	145

安装托架行程
Bracket Mounting Stroke

缸径 Bore size	ST ≥
63	300
80	400
100	500

ARK

薄型双缸气缸
Compact Dual Rod Air Cylinder
Series KCXSJM/L (Ø6~Ø32)

规格 Specifications

缸径 Bore size (mm)	6	10	15	20	25	32
接管口径 Port size Rc(PT)	M3x0.5	M5x0.8				1/8
使用流体 Fluid	过滤压缩空气 Filtered compressed air					
动作形式 Action	双动 Double acting					
保证耐压力 Proof pressure (MPa)	1.05					
使用压力范围 Operating pressure range (MPa)	0.15~0.7	0.1~0.7		0.05~0.7		
环境及流体温度 Ambient and fluid temperature	-5~60℃ (未冻结 No freezing)					
活塞速度 Piston speed (mm/s)	30~800		30~700		30~600	
缓冲 Cushion	橡胶缓冲 Rubber bumper					
行程调整范围 Stroke adjustable range	0~-5 mm (对应标准行程 To the standard stroke)					
* 润滑 Lubrication	不需要 Not required					

* 如需要润滑请使用透平 1 号油 ISOVG32。Please use Turbine oil 1st Grade ISOVG32 if necessary.

行程 / 磁性开关 Stroke/ Auto switch

缸径 Bore size (mm)	标准行程 Standard stroke (mm)	* 可制作的行程 Manufacturable stroke (mm)	磁性开关 Auto switch
6	10, 20, 30, 40, 50	60~100	D-M9BK
10	10, 20, 30, 40, 50, 75	80~150	
15	10, 20, 30, 40, 50, 75, 100	110~150	
20, 25, 32		110~200	

* 超过标准行程范围的行程作非标处理。
Strokes beyond standard stroke range are available as nonstandard order.

型号表示方法 How to Order

KCXSJ [M] [20] [ ] - [30]

轴承 Bearing

M	滑动轴承 Slide bearing
L	滚动导向轴承 Ball bushing bearing

接管形式 Piping

-	标准 Standard (Ø6~Ø32)
P	轴向 Axial (Ø6, Ø10)

缸径 Bore size (mm)

行程 Stroke (mm)

3

外形尺寸图 Dimensions (mm)

KCXJSM/L6

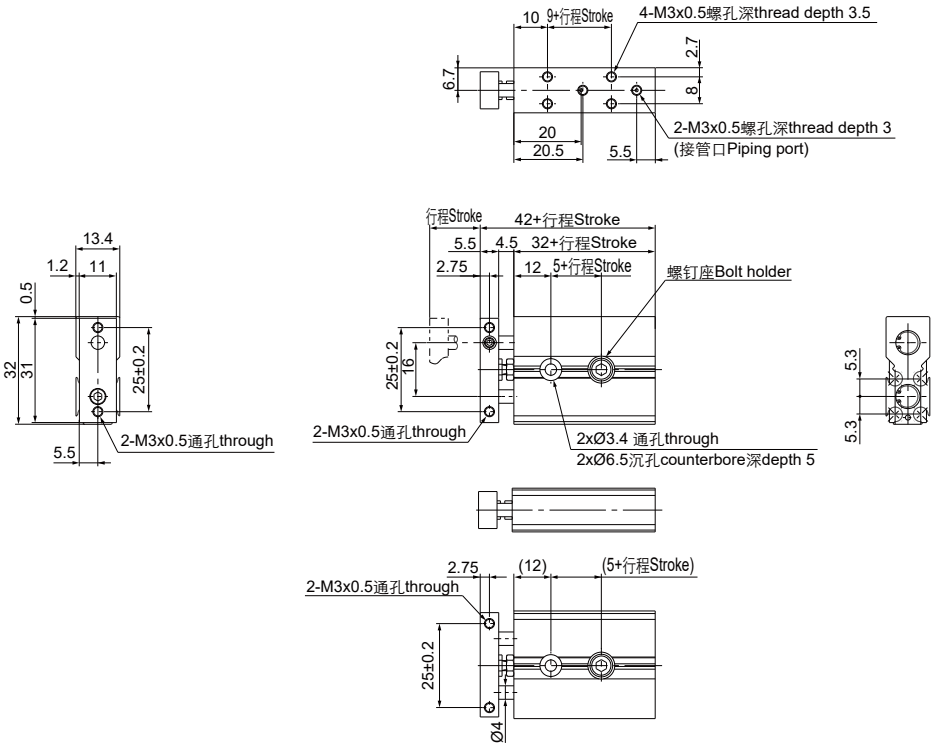

KCXJSM/L10

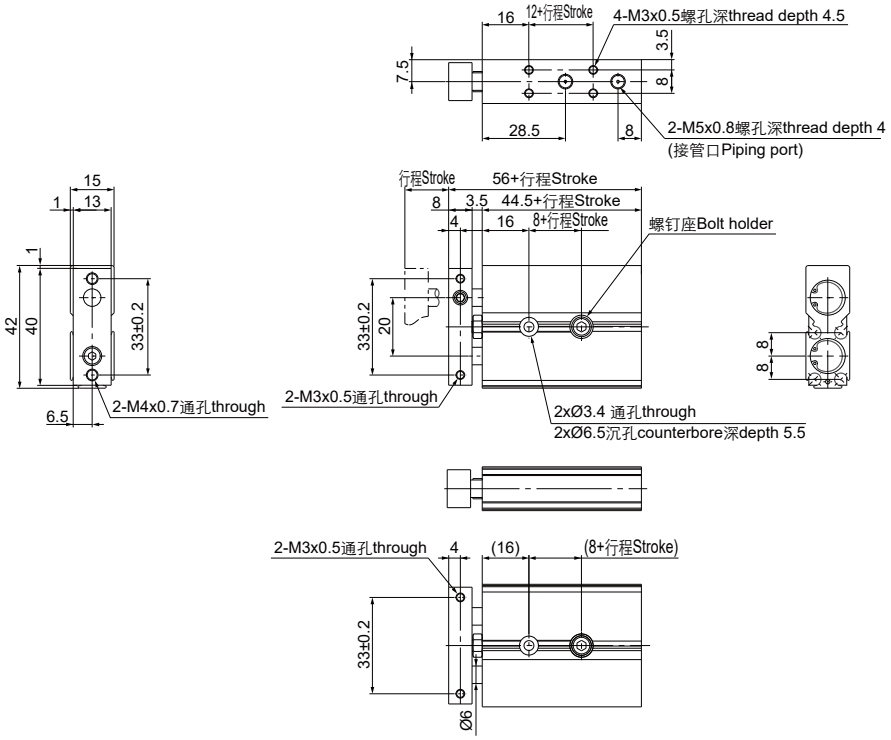

外形尺寸图 Dimensions (mm)

KCXJSM/L6P

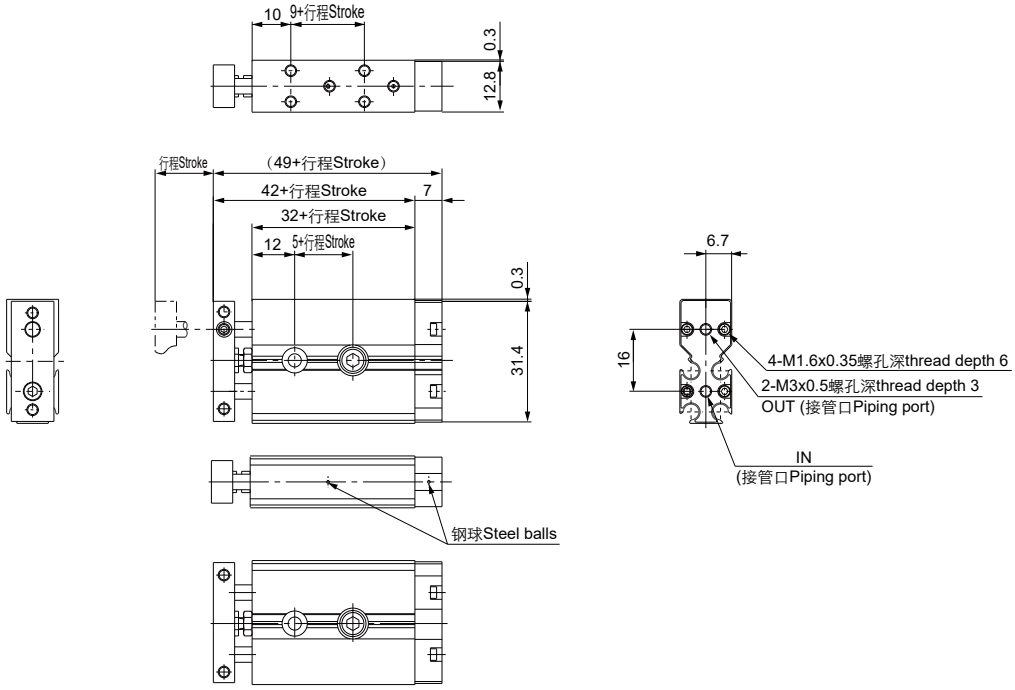

KCXJSM/L10P

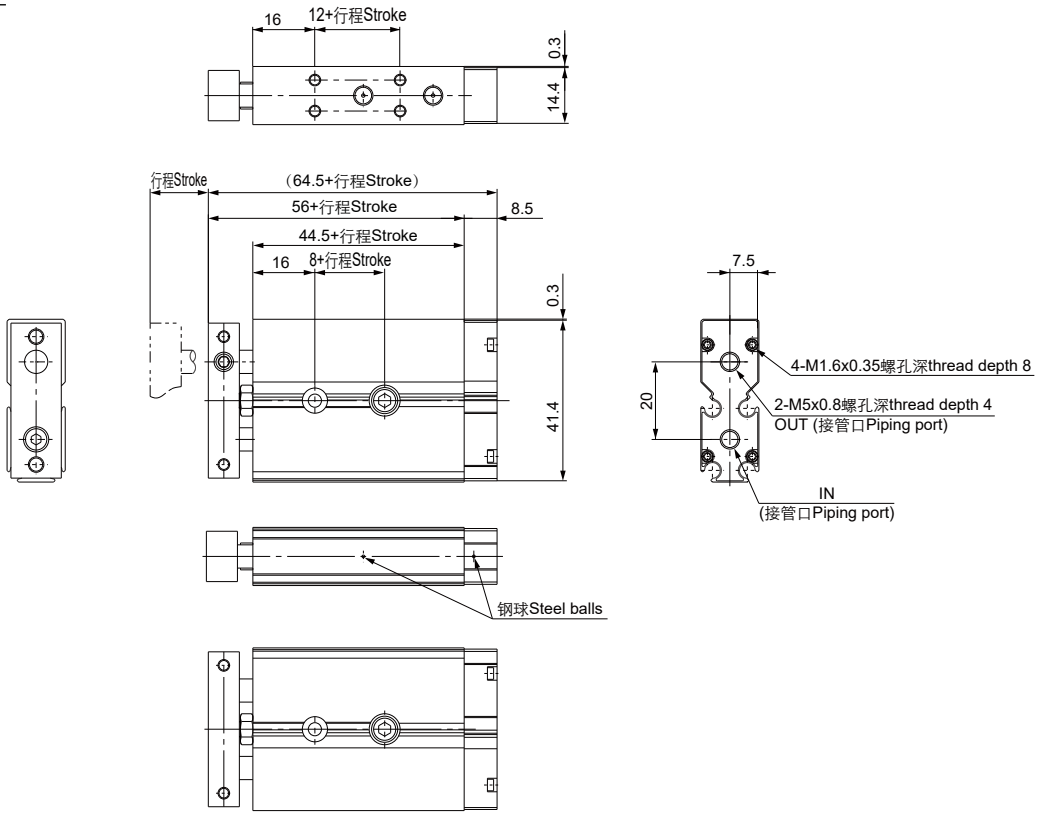

薄型双缸气缸
Compact Dual Rod Air Cylinder
Series KCXSJM/L

外形尺寸图 Dimensions (mm)

KCXJSM/L (Ø15~Ø32)

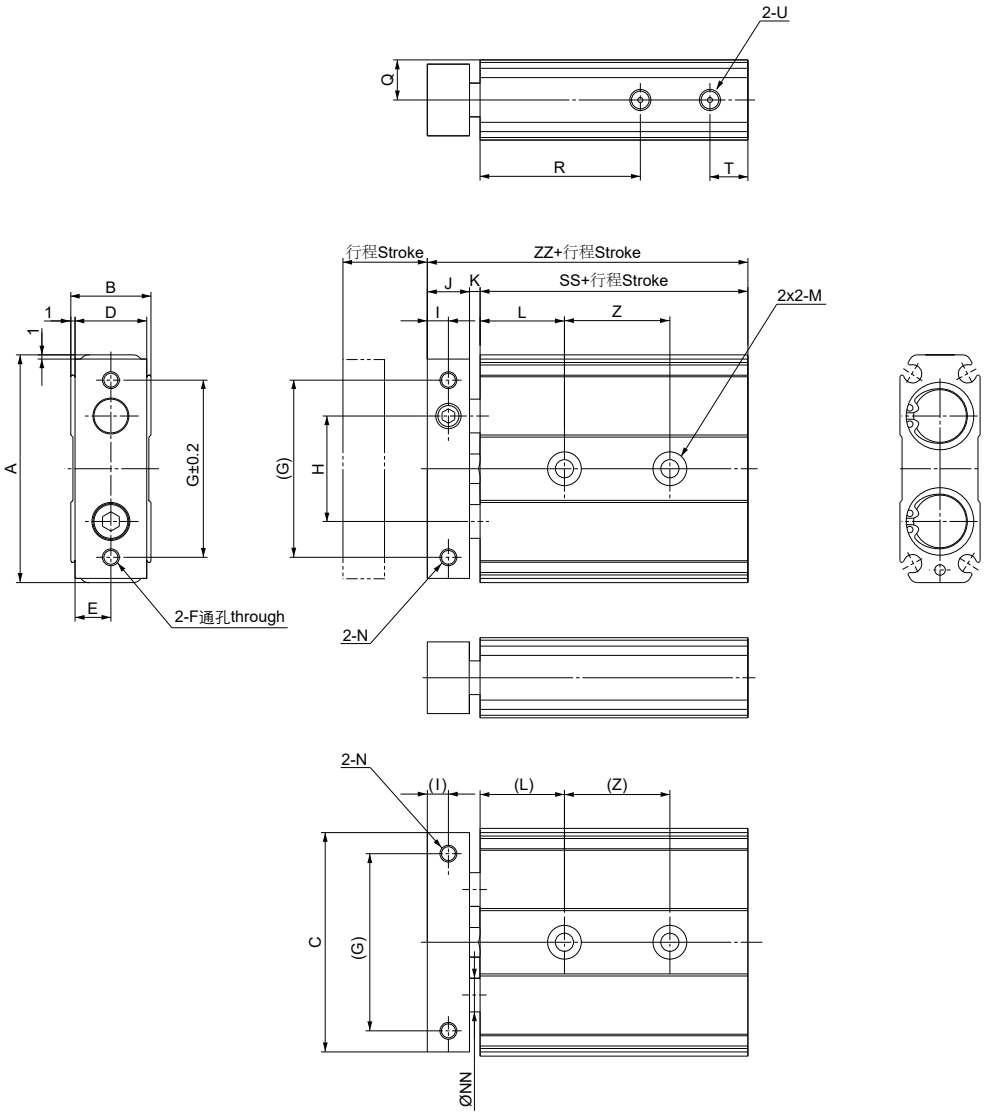

缸径 Bore size	A	B	C	D	E	F	G	H	I	J	K	L	M	N
15	54	19	52	17	8.5	M5x0.8	42	25	5	10	2.5	20	Ø4.3 通孔 through, Ø8 沉孔 counterbore 深 depth 4.3	M4x0.7 深 depth 6
20	62	24	60	22	11	M5x0.8	50	29	6	12	4.5	25	Ø5.5 通孔 through, Ø9.5 沉孔 counterbore 深 depth 5.3	M4x0.7 深 depth 6
25	73	29	71	27	13.5	M6x1.0	60	35	6	12	4.5	30	Ø6.5 通孔 through, Ø11 沉孔 counterbore 深 depth 6.3	M5x0.8 深 depth 7.5
32	94	37	92	35	17.5	M6x1.0	75	45	8	16	4	30	Ø6.5 通孔 through, Ø11 沉孔 counterbore 深 depth 6.3	M5x0.8 深 depth 7.5

缸径 Bore size	NN	Q	R	SS	T	U	Z				ZZ
							ST= 10, 20	ST= 30, 40, 50	ST= 75	ST= 100	
15	8	9.5	38	57.5	9	M5x0.8 沉孔深 counterbore depth 4	25	35	45	55	70
20	10	12	45	67.5	9	M5x0.8 沉孔深 counterbore depth 4	30	40	60		84
25	12	14.5	46	70.5	9	M5x0.8 沉孔深 counterbore depth 4	30	40	60		87
32	16	18.5	56	80.5	10	1/8 沉孔深 counterbore depth 5	40	50	70		100.5

ARK

双缸气缸
Dual Rod Air Cylinder
Series KCXSM/L (Ø10~Ø32)

规格 Specifications

缸径 Bore size (mm)	10	15	20	25	32
接管口径 Port size Rc(PT)	M5x0.8			1/8	
使用流体 Fluid	过滤压缩空气 Filtered compressed air				
动作形式 Action	双动 Double acting				
保证耐压力 Proof pressure (MPa)	1.0				
使用压力范围 Operating pressure range (MPa)	0.1~0.7		0.05~0.7		
环境及流体温度 Ambient and fluid temperature	-5~60℃ (未冻结 No freezing)				
活塞速度 Piston speed	30~600 mm/s				
缓冲 Cushion	橡胶缓冲 Rubber bumper				
行程调整范围 Stroke adjustable range	0~-5 mm (对应标准行程 To the standard stroke)				
* 润滑 Lubrication	不需要 Not required				

* 如需要润滑请使用透平 1 号油 ISOVG32。Please use Turbine oil 1st Grade ISOVG32 if necessary.

行程 / 磁性开关 Stroke/ Auto switch

缸径 Bore size (mm)	标准行程 Standard stroke (mm)	磁性开关 Auto switch	开关固定码 Switch clamp
10	10, 15, 20, 25, 30, 35, 40, 45, 50, 60, 70, 75	D-M9BK	PS
15, 20, 25, 32	10, 15, 20, 25, 30, 35, 40, 45, 50, 60, 70, 75, 80, 90, 100		

* 非标行程可定制。Nonstandard stroke can be customized.

型号表示方法 How to Order

KCXS **M** **20** - **25**

- 行程 Stroke (mm)
- 缸径 Bore size (mm)
- 轴承 Bearing

M	滑动轴承 Slide bearing
L	滚动导向轴承 Ball bushing bearing

3

双缸气缸
Dual Rod Air Cylinder
Series KCXSM/L

外形尺寸图 Dimensions (mm)

KCXSM/L

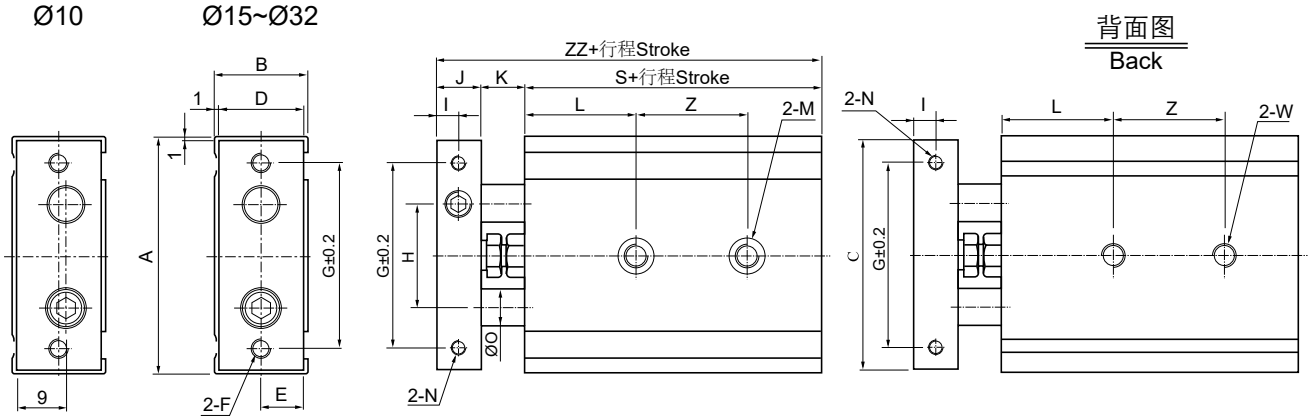

Ø10, Ø15

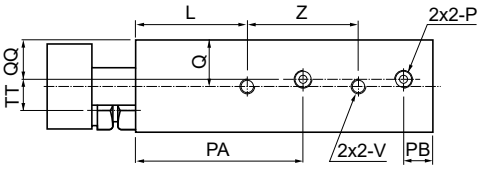

Ø20~Ø32

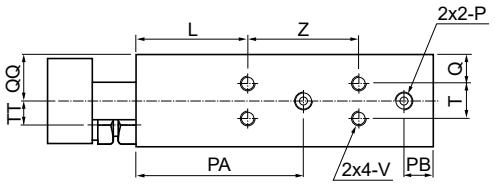

缸径 Bore size	A	B	C	D	E	F	G	H	I	J	K	L	M	N
10	46	17	44	15	7.5	M4x0.7	35	20	4	8	9	20	Ø3.4 通孔 through, Ø6.5 沉孔 counterbore 深 depth 3.3	M3x0.5 深 depth 5
15	58	20	56	18	9	M5x0.8	45	25	5	10	9	30	Ø4.3 通孔 through, Ø8 沉孔 counterbore 深 depth 4.4	M4x0.7 深 depth 6
20	64	25	62	23	11.5	M5x0.8	50	28	6	12	12	30	Ø5.2 通孔 through, Ø9.5 沉孔 counterbore 深 depth 5.3	M4x0.7 深 depth 6
25	80	30	78	28	14	M6x1.0	60	35	6	12	12	30	Ø6.9 通孔 through, Ø11 沉孔 counterbore 深 depth 6.3	M5x0.8 深 depth 8
32	98	38	96	36	18	M6x1.0	75	44	8	16	14	30	Ø6.9 通孔 through, Ø11 沉孔 counterbore 深 depth 6.3	M5x0.8 深 depth 8

缸径 Bore size	O	P	PA	PB	Q	QQ	T	TT	V	W	S	Z					ZZ
												ST= 10,15, 20, 25	ST= 30, 35, 40, 45, 50	ST= 60, 70, 75	ST= 80	ST= 90, 100	
10	6	M5x0.8	30	8	8.5	7	-	5	M3x0.5 深 depth 5	M4x0.7 深 depth 7	55	30	40	50	-	-	72
15	8	M5x0.8	38.5	8	10	10	-	5	M4x0.7 深 depth 5	M5x0.8 深 depth 8	60	25	35	45		55	79
20	10	M5x0.8	45	8	7.75	12.5	9.5	6.5	M4x0.7 深 depth 6	M6x1.0 深 depth 10	70	30	40	60			94
25	12	1/8	46	9	8.5	15	13	9	M5x0.8 深 depth 7.5	M8x1.25 深 depth 12	72	30	40	60			96
32	16	1/8	56	10	9	19	20	11.5	M5x0.8 深 depth 7.5	M8x1.25 深 depth 12	82	40	50	70			112

ARK

双轴型双缸气缸
Dual Rod Air Cylinder/ Double Rod
Series KCXSW (Ø10~Ø25)

规格 Specifications

缸径 Bore size (mm)	10	15	20	25
接管口径 Port size Rc(PT)	M5x0.8			1/8
使用流体 Fluid	过滤压缩空气 Filtered compressed air			
动作形式 Action	双动 Double acting			
保证耐压力 Proof pressure (MPa)	1.0			
使用压力范围 Operating pressure range (MPa)	0.15~0.7		0.1~0.7	
环境及流体温度 Ambient and fluid temperature	-5~60℃ (未冻结 No freezing)			
活塞速度 Piston speed	50~500 mm/s			
缓冲 Cushion	橡胶缓冲 Rubber bumper			
行程调整范围 Stroke adjustable range	0~-10 mm (对应标准行程 To the standard stroke)			
* 润滑 Lubrication	不需要 Not required			

* 如需要润滑请使用透平 1 号油 ISOVG32。Please use Turbine oil 1st Grade ISOVG32 if necessary.

行程 / 磁性开关 Stroke/ Auto switch

缸径 Bore size (mm)	标准行程 Standard stroke (mm)	磁性开关 Auto switch	开关固定码 Switch clamp
10	10, 20, 30, 40, 50, 75, 100	D-M9BK	PS
15, 20, 25	10, 20, 30, 40, 50, 75, 100, 125, 150		

* 非标行程可定制。Nonstandard stroke can be customized.

型号表示方法 How to Order

KCXSW M 20 - 20

- 行程 Stroke (mm)
- 轴承 Bearing

M	滑动轴承 Slide bearing

- 缸径 Bore size (mm)

3

双轴型双缸气缸
Dual Rod Air Cylinder/ Double Rod
Series KCXSW

外形尺寸图 Dimensions (mm)

KCXSWM10

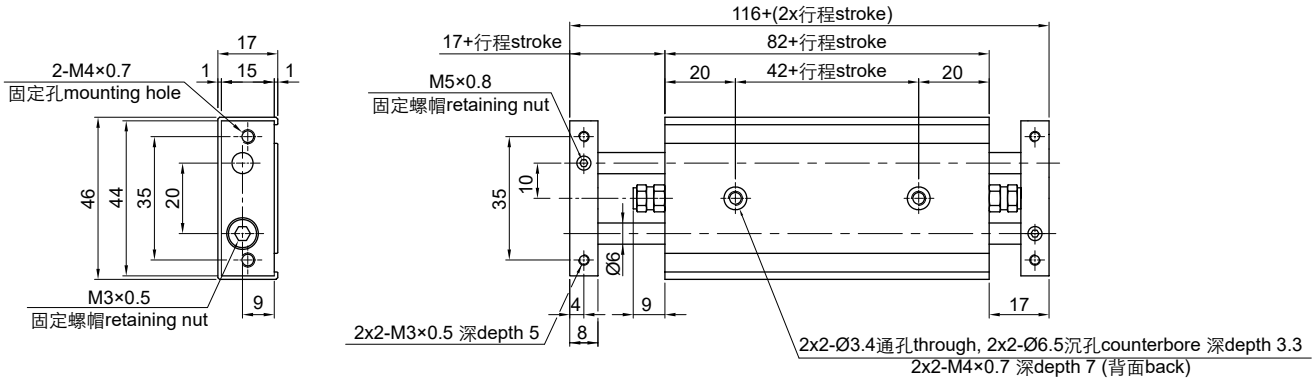

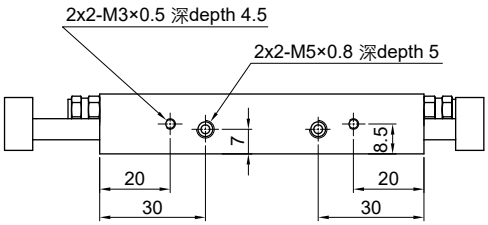

KCXSWM15

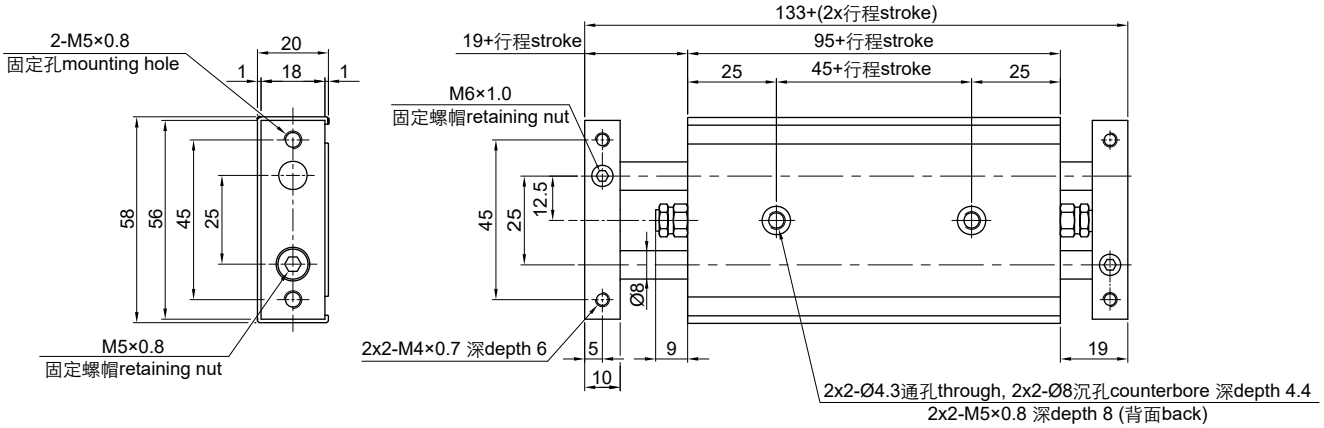

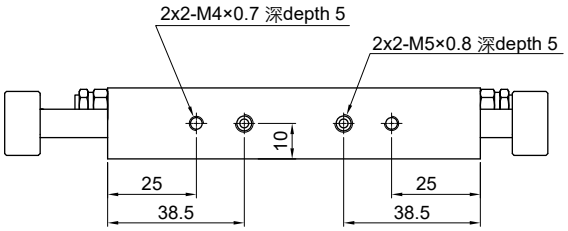

3

双轴型双缸气缸
Dual Rod Air Cylinder/ Double Rod
Series KCXSW

外形尺寸图 Dimensions (mm)

KCXSWM20

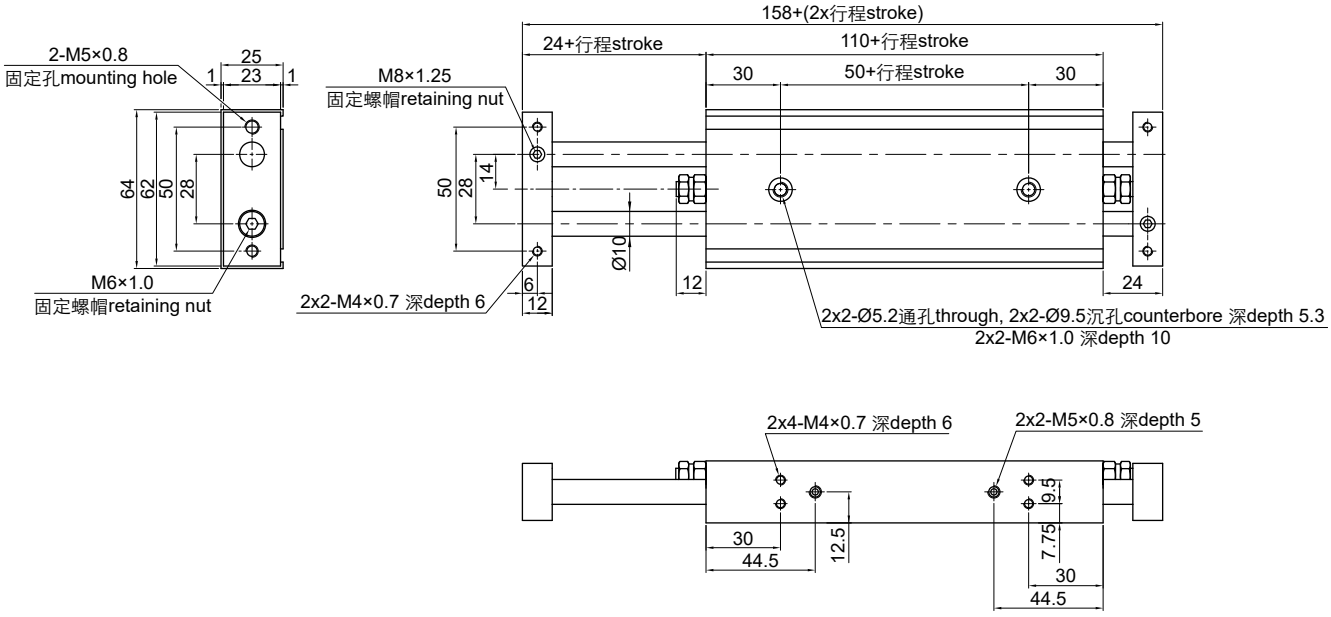

KCXSWM25

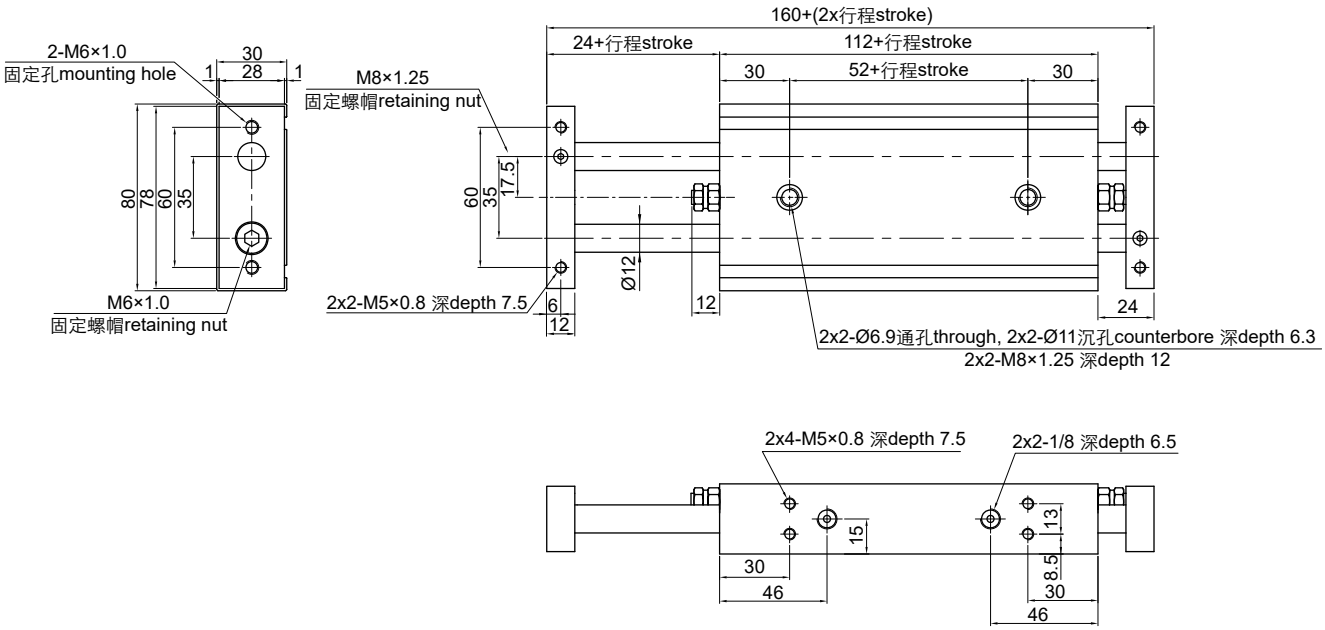

3

ARK

双缸气缸
Dual Rod Air Cylinder
Series TN (Ø10~Ø32)

规格 Specifications

缸径 Bore size (mm)	10	16	20	25	32
接管口径 Port size	M5x0.8				Rc(PT)1/8
使用流体 Fluid	过滤压缩空气 Filtered compressed air				
动作形式 Action	双动 Double acting				
保证耐压力 Proof pressure (MPa)	1.5				
使用压力范围 Operating pressure range (MPa)	0.1~1.0				
环境及流体温度 Ambient and fluid temperature	-5~60℃ (未冻结 No freezing)				
活塞速度 Piston speed	30~500 mm/s				
缓冲 Cushion	橡胶缓冲 Rubber bumper				
调整行程 Adjustable stroke (mm)	-10~0				
行程公差 Stroke tolerance (mm)	$^{+1.0}_{0}$				
活塞杆不回转精度 Rod non-rotating accuracy	±0.4°	±0.3°			
* 润滑 Lubrication	不需要 Not required				

* 如需要润滑请使用透平 1 号油 ISOVG32。Please use Turbine oil 1st Grade ISOVG32 if necessary.

行程 / 磁性开关 Stroke/ Auto switch

缸径 Bore size (mm)	标准行程 Standard stroke (mm)	磁性开关 / 轨道安装 Auto switch/ Rail mounting
10	10, 20, 30, 40, 50, 60, 70, 80, 90, 100	KT-11R
16, 20, 25, 32	10, 20, 30, 40, 50, 60, 70, 80, 90, 100, 125, 150, 175, 200	

* 100mm 行程范围内的中间行程最小间隔为 1mm, 通过在比中间行程长的标准行程缸筒内安装隔板的方式实现。
In case stroke <100 mm, middle stroke with minimum interval 1 mm is implemented by using spacer in barrel of standard stroke.

3

型号表示方法 How to Order

TN 20 - 30 S

- 缸径 Bore size (mm): 20
- 行程 Stroke (mm): 30
- 磁环 Magnet:

S	内置磁环 Built-in magnet

双缸气缸
Dual Rod Air Cylinder
Series TN

外形尺寸图 Dimensions (mm)

Ø10

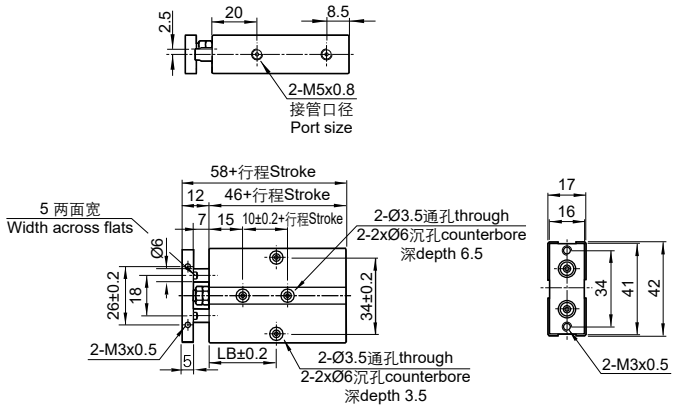

缸径 Bore size \ 行程 stroke	LB									
	10	20	30	40	50	60	70	80	90	100
10	30	30	35	40	45	50	55	60	65	70

Ø16~Ø25

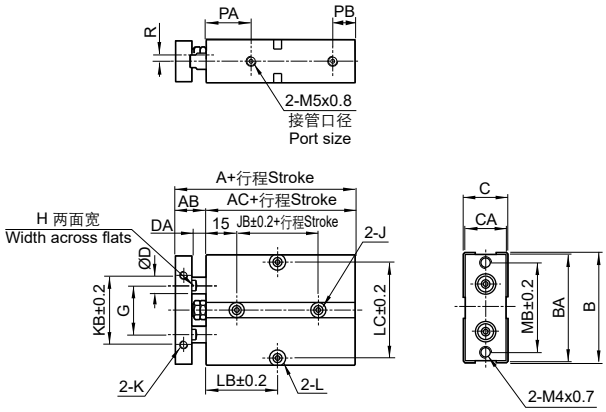

缸径 Bore size \ 行程 stroke	LB													
	10	20	30	40	50	60	70	80	90	100	125	150	175	200
16	30	35	40	45	50	55	60	65	70	75	87.5	100	112.5	125
20	35	35	40	45	50	55	60	65	70	75	87.5	100	112.5	125
25	40	40	45	50	55	60	65	70	75	80	92.5	105	117.5	130

缸径 Bore size	L
16	Ø4.5 通孔 through, 2xØ8 沉孔 counterbore 深 depth 4.5
20	Ø4.5 通孔 through, 2xØ8 沉孔 counterbore 深 depth 4.5
25	Ø4.5 通孔 through, 2xØ8 沉孔 counterbore 深 depth 4.5

缸径 Bore size	A	AB	AC	B	BA	C	CA	D	DA	G	H	J	JB	K	KB	MB	PA	PB	R
16	68	15	53	54	53	21	20	8	7	24	6	Ø4.5 通孔 through, 2xØ7.5 沉孔 counterbore 深 depth 7.5	20	M4x0.7 深 depth 5	34	47	22	11	3
20	78	20	58	62	61	25	24	10	10	28	8	Ø4.5 通孔 through, 2xØ7.5 沉孔 counterbore 深 depth 7.5	20	M4x0.7 深 depth 5	44	55	25	12	3.5
25	81	19	62	73	72	30	29	12	9	34	10	Ø4.5 通孔 through, 2xØ7.5 沉孔 counterbore 深 depth 7.5	30	M4x0.7 深 depth 6	56	66	27	12	6

Ø32

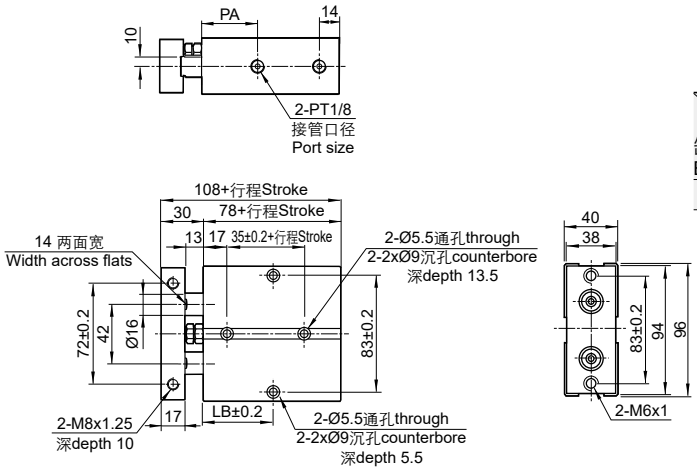

缸径 Bore size \ 行程 stroke	LB													
	10	20	30	40	50	60	70	80	90	100	125	150	175	200
32	45	50	55	60	65	70	75	80	85	90	102.5	115	127.5	140

缸径 Bore size \ 行程 stroke	PA	
	10	20~200
32	35	40

3

ARK 小型自由安装气缸
Miniature Free Mount Air Cylinder
Series KCUJ (Ø6~Ø20)

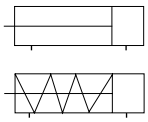

规格 Specifications

缸径 Bore size (mm)		6	8	10	12	16	20
接管口径 Port size Rc(PT)		M3x0.5					M5x0.8
使用流体 Fluid		过滤压缩空气 Filtered compressed air					
动作形式 Action		双动 / 单动 (弹簧压回) Double acting/ Single acting (spring return)					
保证耐压力 Proof pressure (MPa)		1.05					
使用压力范围 Operating pressure range (MPa)	双动 Double acting	0.15~0.7		0.1~0.7	0.07~0.7		0.05~0.7
	单动 (弹簧压回) Sing acting (sping return)	0.3~0.7		0.2~0.7	0.25~0.7		0.18~0.7
环境及流体温度 Ambient and fluid temperature		-5~60℃ (未冻结 No freezing)					
活塞速度 Piston speed		50~500 mm/s					
缓冲 Cushion		无 None			橡胶缓冲 Rubber bumper		
行程公差 Stroke tolerance (mm)		+0.5 0			+1.0 0		
* 润滑 Lubrication		不需要 Not required					

* 如需要润滑请使用透平 1 号油 ISOVG32。Please use Turbine oil 1st Grade ISOVG32 if necessary.

行程 / 磁性开关 Stroke/ Auto switch

缸径 Bore size (mm)	标准行程 Standard stroke (mm)		磁性开关 Auto switch	开关固定码 Switch clamp
	双动 Double acting	单动 Single acting		
6	4, 6, 8, 10, 15, 20, 25, 30	4, 6, 8	KT-38	-
8, 10		4, 6, 8, 10		
12, 16	5, 10, 15, 20, 25, 30	5, 10		
20	5, 10, 15, 20, 25, 30, 35, 40, 45, 50			

3

型号表示方法 How to Order

KC D UJ B 16 - 15 D M

磁环 Magnet

-	无 None
D	内置磁环 Built-in magnet

安装 Mounting

B	基本型 (通孔型) Basic (Through-hole)	Ø6~Ø10
	侧面安装 Lateral mounting	Ø12~Ø20
S	轴向安装 Axial mounting	

缸径 Bore size (mm)

行程 Stroke (mm)

动作形式 Action

D	双动 Double acting
S	单动 (弹簧压回) Single acting (Spring return)

杆端螺纹 Rod end thread

-	杆端内螺纹 Rod end female thread
M	杆端外螺纹 Rod end male thread

小型自由安装气缸
Mini Free Mount Air Cylinder
Series KCUJ

外形尺寸图 Dimensions (mm)

KC(D)UJB (Ø6~Ø10)

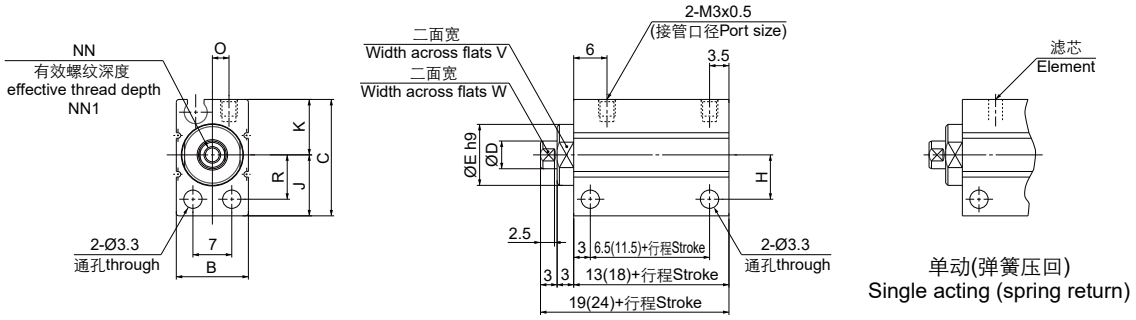

单动(弹簧压回)
Single acting (spring return)

* ( )为内置磁环形式尺寸。
( ) shows the dimensions of built-in magnet type.

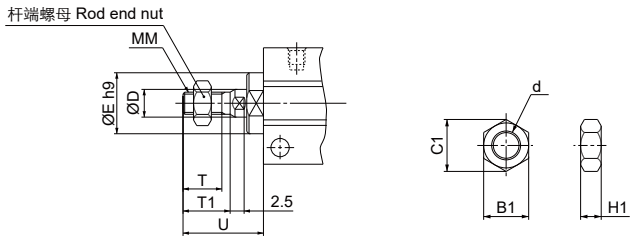

杆端外螺纹
Rod end male thread

杆端螺母
Rod end nut

缸径 Bore size	B	C	D	E	H	J	K	MM	NN	NN1	O	R	T	T1	U	V	W
6	13	19	4	9	7	10	9	M3x0.5	M2.5x0.45	5	3	7	5.5	6.5	12.5	8	3.5
8	13	21	5	11	8	11	10	M4x0.7	M3x0.5	6	3	8	7	8.5	14.5	10	4.5
10	13.5	22	6	12	8.5	11.5	10.5	M5x0.8	M3x0.5	6	3.2	8.5	9	10.5	16.5	11	5

缸径 Bore size	B1	C1	d	H1
6	5.5	6.4	M3x0.5	2.4
8	7	8.1	M4x0.7	3.2
10	8	9.2	M5x0.8	4

小型自由安装气缸
Mini Free Mount Air Cylinder
Series KCUJ

外形尺寸图 Dimensions (mm)

KC(D)UJB (Ø12~Ø20)

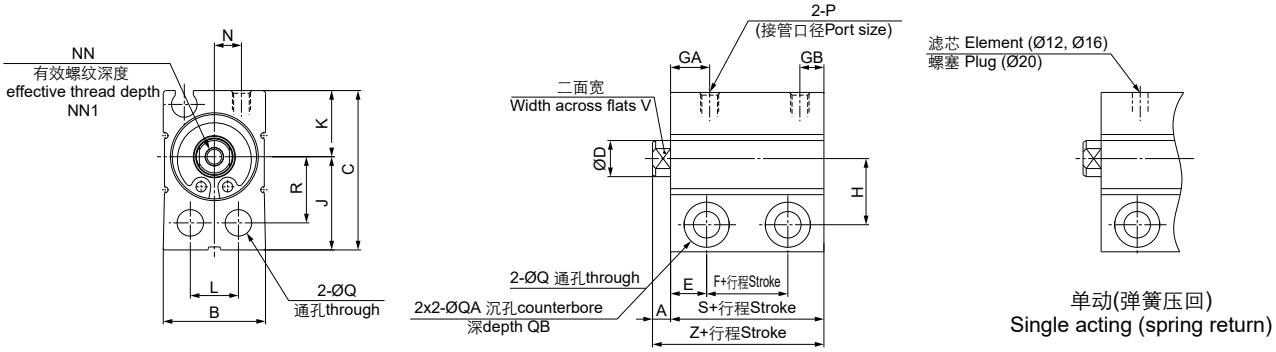

单动(弹簧压回)
Single acting (spring return)

KC(D)UJS (Ø12~Ø20)

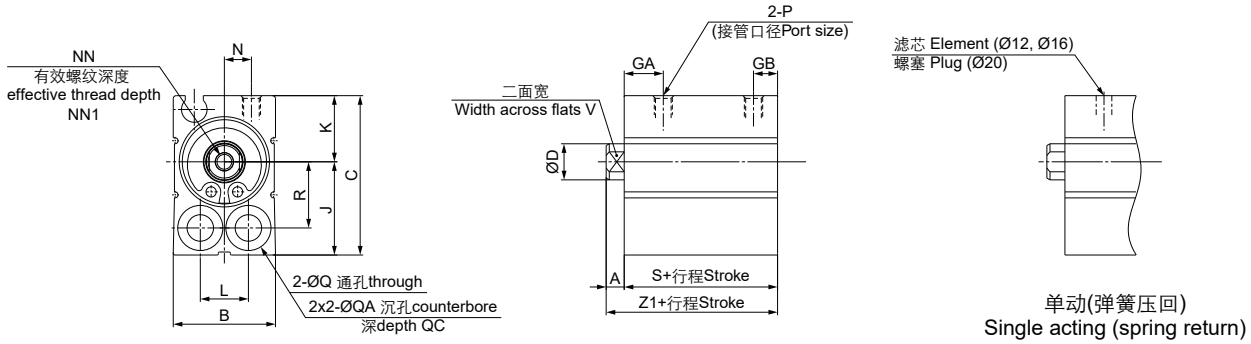

单动(弹簧压回)
Single acting (spring return)

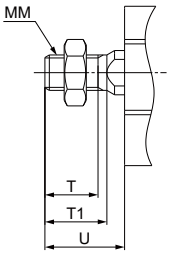

杆端外螺纹
Rod end male thread

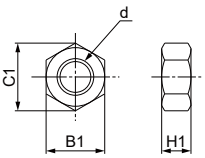

杆端螺母
Rod end nut

缸径 Bore size	A	B	C	D	E	GB	H	J	K	L	MM	NN	NN1	N	P	Q	QA	QB	QC	R	T	T1	U	V	W
12	3.5	17	26.5	6	6	4	11	15.5	11	8	M5x0.8	M3x0.5	6	3.5	M3x0.5	4.4	7.5	7	5.5	11	9	10.5	14	5	26
16	3.5	21	29.5	8	6	4	12.5	17	12.5	11.5	M6x1.0	M4x0.7	8	5.5	M3x0.5	4.5	7.5	7	5.5	12.5	10	12	15.5	6	27.5
20	4.5	25	36	10	7	4.5	15.5	21	15	13.5	M8x1.25	M5x0.8	7	7	M5x0.8	5.5	9.5	9	6.5	15.5	12	14	18.5	8	30

缸径 Bore size	无磁环 Without magent					内置磁环 Built-in magnet				
	F	GA	S	Z	Z1	F	GA	S	Z	Z1
12	3.5(5)	7.5	15.5(17)	19(20.5)	19(20.5)	7.5(9)	7.5	19.5(21)	23(24.5)	23(24.5)
16	4	8.5	16	20	19.5	8.5	9	20.5	24.5	24
20	5.5	8.5	19.5	24	24	9.5	8.5	23.5	28	28

* ( ) 内为单动弹簧压回型的尺寸。( ) shows the dimensions of single acting spring return type.

缸径 Bore size	B1	C1	d	H1
12	8	9.2	M5x0.8	4
16	10	11.5	M6x1.0	5
20	13	15	M8x1.25	5

ARK 自由安装气缸
Free Mount Air Cylinder
Series KCU (Ø6~Ø32)

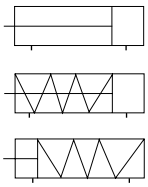

规格 Specifications

缸径 Bore size (mm)	6	10	16	20	25	32
接管口径 Port size Rc(PT)	M5x0.8					1/8
使用流体 Fluid	过滤压缩空气 Filtered compressed air					
动作形式 Action	双动 / 单动 Double acting/ Single acting					
保证耐压力 Proof pressure (MPa)	1.05					
使用压力范围 Operating pressure range (MPa)	0.05~0.7					
环境及流体温度 Ambient and fluid temperature	-5~60℃ (未冻结 No freezing)					
活塞速度 Piston speed	50~500 mm/s					
缓冲 Cushion	橡胶缓冲 Rubber bumper					
行程公差 Stroke tolerance (mm)	$^{+1.0}_{0}$					
* 润滑 Lubrication	不需要 Not required					

* 如需要润滑请使用透平 1 号油 ISOVG32。Please use Turbine oil 1st Grade ISOVG32 if necessary.

行程 / 磁性开关 Stroke/ Auto switch

缸径 Bore size (mm)	标准行程 Standard stroke (mm)		长行程 Long stroke (mm)	磁性开关 / 轨道安装 Auto switch/ Rail mounting
	双动 Double acting	单动 Single acting	双动 Double acting	
6, 10, 16	5, 10, 15, 20, 25, 30	5, 10, 15	40, 50, 60	D-M9BK
20, 25, 32	5, 10, 15, 20, 25, 30, 40, 50		60, 70, 80, 90, 100	

型号表示方法 How to Order

KC [D] U [W] [16] - [15] [D]

磁环 Magnet

-	无 None
D	内置磁环 Built-in magnet

活塞杆形式 Rod type

-	基本型 Basic
K	杆不回转型 Non-rotating
W	双活塞杆 (仅双动) Double rod (double acting only)
KW	杆不回转双活塞杆 (仅双动) Non-rotating double rod (double acting only)

缸径 Bore size (mm)

行程 Stroke (mm)

动作形式 Action

D	双动 Double acting
S	单动 (弹簧压回) Single acting (Spring return)
T	单动 (弹簧压出) Single acting (Spring extend)

3

自由安装气缸
Free Mount Air Cylinder
Series KCU

外形尺寸图 Dimensions (mm)

KC(D)U-D

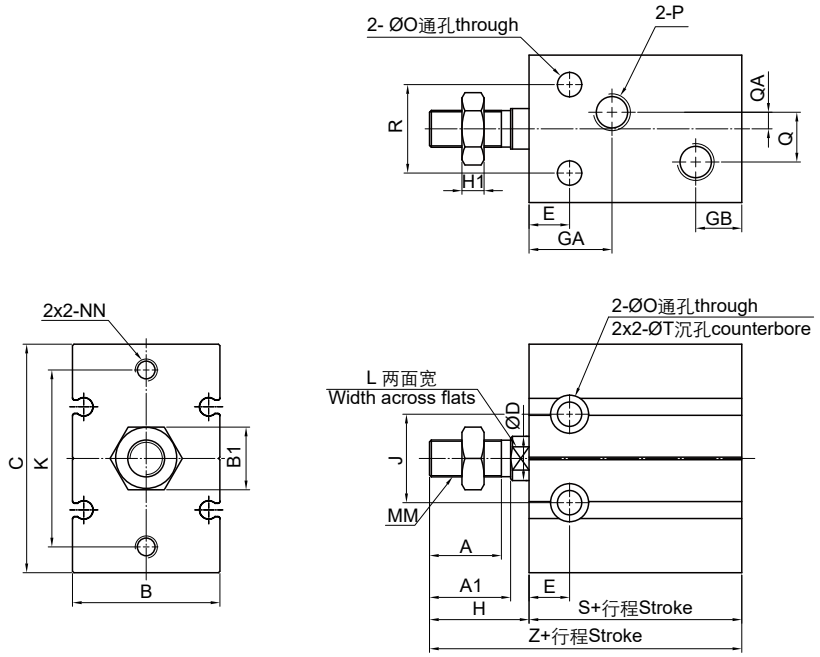

KC(D)UW-D

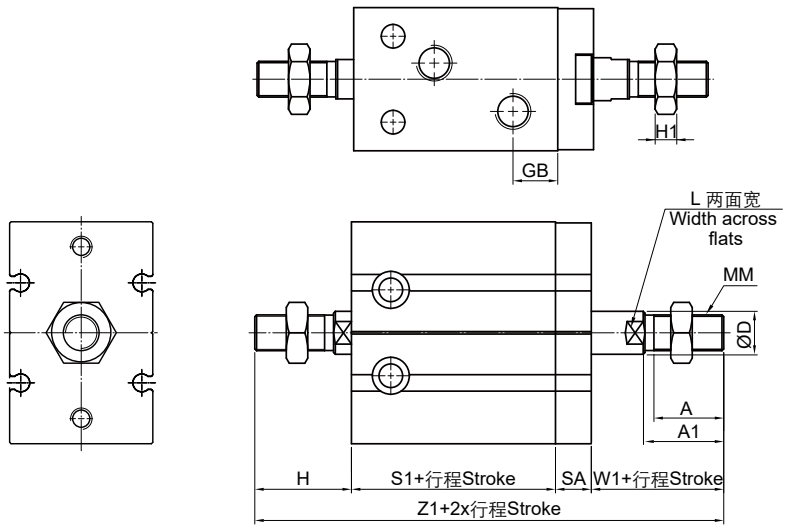

*未标注尺寸与KC(D)U-D相同。The dimensions unmentioned are same as KC(D)U-D.

缸径 Bore size	KCU				KCDU			
	S	S1	Z	Z1	S	S1	Z	Z1
6	33	38	46	70	33	38	46	70
10	36	36	52	74	36	36	52	74
16	30	30	46	69.5	40	40	56	79.5
20	36	36	55	83	46	46	65	93
25	40	40	63	95	50	50	73	105
32	42	42	69	106	52	52	79	116

缸径 Bore size	A	A1	B	B1	C	D	E	GA	GB	H	H1	J	K	L	MM	NN	O	P	Q	QA	R	SA	T	W1
6	7	-	13	5.5	22	3	7	15	10	13	2-1.8	10	17	-	M3x0.5	M3x0.5 深 depth 5	3.2	M5x0.8	-	-	7	6	6 深 depth 4.8	13
10	10	-	15	7	24	4	7	16.5	10	16	2-2.4	11	18	-	M4x0.7	M3x0.5 深 depth 5	3.2	M5x0.8	-	-	9	6	6 深 depth 5	16
16	11	12.5	20	8	32	6	7	16.5	11.5	16	4	14	25	5	M5x0.8	M4x0.7 深 depth 6	4.5	M5x0.8	4	2	12	7.5	7.6 深 depth 6.5	16
20	12	14	26	10	40	8	9	19	12.5	19	5	16	30	6	M6x1.0	M5x0.8 深 depth 8	5.5	M5x0.8	9	4.5	16	9	9.3 深 depth 8	19
25	15.5	18	32	13	50	10	10	21.5	13.5	23	5	20	38	8	M8x1.25	M5x0.8 深 depth 8	5.5	M5x0.8	9	4.5	20	9	9.3 深 depth 9	23
32	19.5	22	40	17	62	12	11	23	12.5	27	6	24	48	10	M10x1.25	M6x1.0 深 depth 9	6.6	1/8	13.5	4.5	24	10	11 深 depth 11.5	27

自由安装气缸
Free Mount Air Cylinder
Series KCU

外形尺寸图 Dimensions (mm)

KC(D)U-S

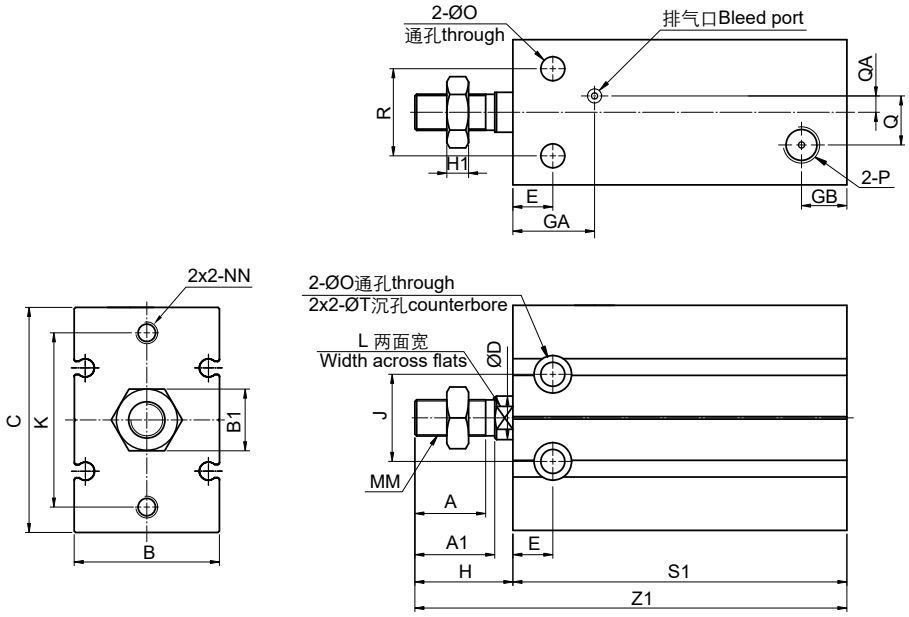

缸径 Bore size	KCU-S					
	S1			Z1		
	ST=5	ST=10	ST=15	ST=5	ST=10	ST=15
6	38	43	48	51	56	61
10	41	46	56	57	62	72
16	35	40	50	51	56	66
20	41	46	56	60	65	75
25	45	50	60	68	73	83
32	47	52	62	74	79	89

缸径 Bore size	KCDU-S					
	S1			Z1		
	ST=5	ST=10	ST=15	ST=5	ST=10	ST=15
6	38	43	48	51	56	61
10	41	46	56	57	62	72
16	45	50	60	61	66	76
20	51	56	66	70	75	85
25	55	60	70	78	83	93
32	57	62	72	84	89	99

KC(D)U-T

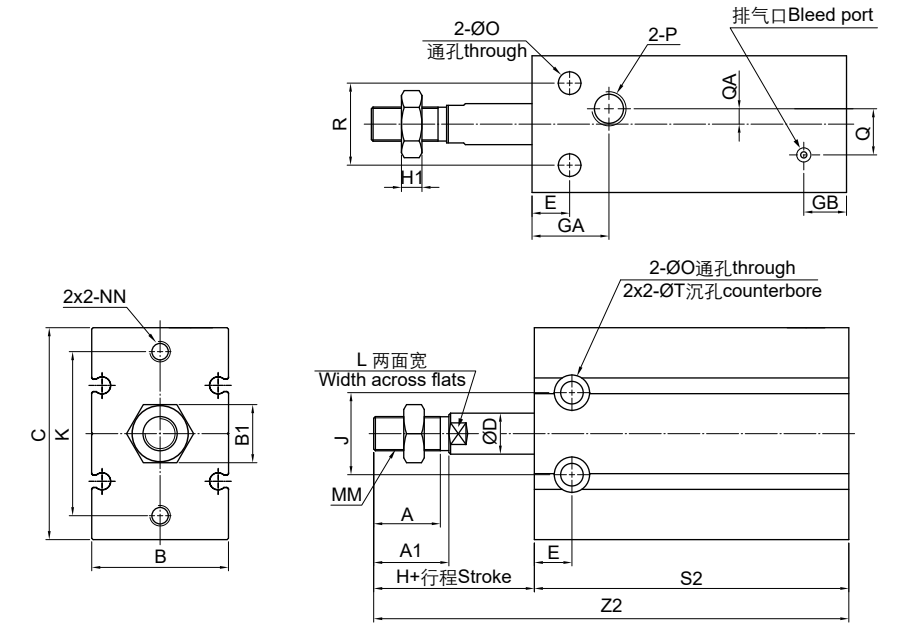

缸径 Bore size	KCU-T					
	S2			Z2		
	ST=5	ST=10	ST=15	ST=5	ST=10	ST=15
6	38	43	48	56	66	76
10	41	46	56	62	72	87
16	45	50	60	66	76	91
20	41	46	56	65	75	90
25	45	50	60	73	83	98
32	47	52	62	79	89	104

缸径 Bore size	KCDU-T					
	S2			Z2		
	ST=5	ST=10	ST=15	ST=5	ST=10	ST=15
6	38	43	48	56	66	76
10	41	46	56	62	72	87
16	45	50	60	66	76	91
20	51	56	66	75	85	100
25	55	60	70	83	93	108
32	57	62	72	89	99	114

缸径 Bore size	A	A1	B	B1	C	D	E	GA	GB	H	H1	J	K	L	MM	NN	O	P	Q	QA	R	T
6	7	-	13	5.5	22	3	7	15	10	13	2-1.8	10	17	-	M3x0.5	M3x0.5 深 depth 5	3.2	M5x0.8	-	-	7	6 深 depth 4.8
10	10	-	15	7	24	4	7	16.5	10	16	2-2.4	11	18	-	M4x0.7	M3x0.5 深 depth 5	3.2	M5x0.8	-	-	9	6 深 depth 5
16	11	12.5	20	8	32	6	7	16.5	11.5	16	4	14	25	5	M5x0.8	M4x0.7 深 depth 6	4.5	M5x0.8	4	2	12	7.6 深 depth 6.5
20	12	14	26	10	40	8	9	19	12.5	19	5	16	30	6	M6x1.0	M5x0.8 深 depth 8	5.5	M5x0.8	9	4.5	16	9.3 深 depth 8
25	15.5	18	32	13	50	10	10	21.5	13.5	23	5	20	38	8	M8x1.25	M5x0.8 深 depth 8	5.5	M5x0.8	9	4.5	20	9.3 深 depth 9
32	19.5	22	40	17	62	12	11	23	12.5	27	6	24	48	10	M10x1.25	M6x1.0 深 depth 9	6.6	1/8	13.5	4.5	24	11 深 depth 11.5

自由安装气缸
Free Mount Air Cylinder
Series KCU

外形尺寸图 Dimensions (mm)

KC(D)UK-D

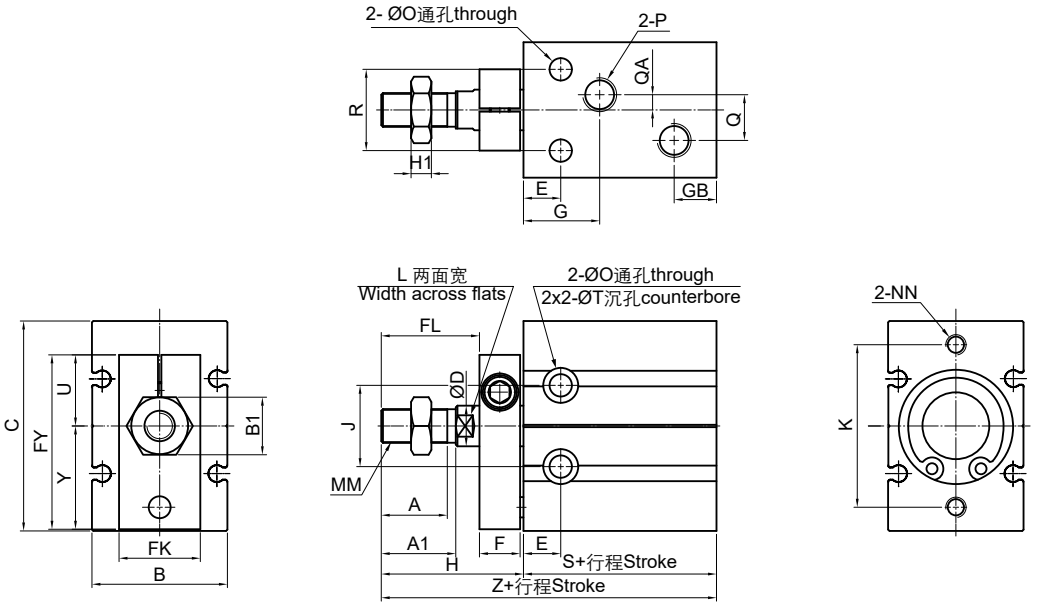

KC(D)UKW-D

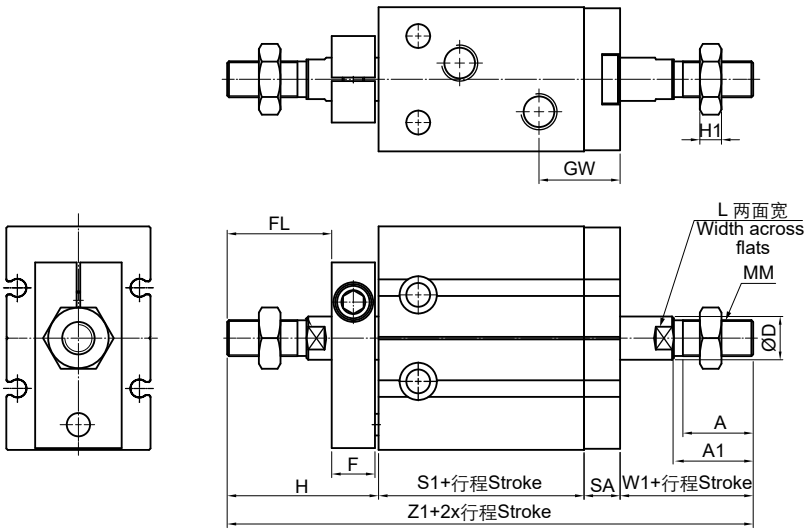

缸径 Bore size	KCUK				KCDUK			
	S	S1	Z	Z1	S	S1	Z	Z1
6	33	38	51	75	33	38	51	75
10	36	36	57	79	36	36	57	79
16	30	30	56	79.5	40	40	66	89.5
20	36	36	65	93	46	46	75	103
25	40	40	73	105	50	50	83	115
32	42	42	84	121	52	52	94	131

缸径 Bore size	T	U	W1	Y
6	6 深 depth 4.8	10	13	10.5
10	6 深 depth 5	10.5	16	11.5
16	7.6 深 depth 6.5	12.5	16	15.5
20	9.3 深 depth 8	13.5	19	19.5
25	9.3 深 depth 9	19	23	24.5
32	11 深 depth 11.5	21	27	30.5

*未标注尺寸与KC(D)UK-D相同。The dimensions unmentioned are same as KC(D)UK-D.

缸径 Bore size	A	A1	B	B1	C	D	E	F	FL	FK	FY	GA	GB	H	H1	J	K	L	MM	NN	O	P	Q	QA	R	SA
6	7	-	13	5.5	22	3	7	8	9	11	20.5	15	10	18	2-1.8	10	17	-	M3x0.5	M3x0.5 深 depth 5	3.2	M5x0.8	-	-	7	6
10	10	-	15	7	24	4	7	8	12	12	22	16.5	10	21	2-2.4	11	18	-	M4x0.7	M3x0.5 深 depth 5	3.2	M5x0.8	-	-	9	6
16	11	12.5	20	8	32	6	7	8	17	13	28	*16.5	11.5	26	4	14	25	5	M5x0.8	M4x0.7 深 depth 6	4.5	M5x0.8	4	2	12	7.5
20	12	14	26	10	40	8	9	8	20	16	33	19	12.5	29	5	16	30	6	M6x1.0	M5x0.8 深 depth 8	5.5	M5x0.8	9	4.5	16	9
25	15.5	18	32	13	50	10	10	10	22	20	43.5	21.5	13.5	33	5	20	38	8	M8x1.25	M5x0.8 深 depth 8	5.5	M5x0.8	9	4.5	20	9
32	19.5	22	40	17	62	12	11	12	29	24	51.5	23	12.5	42	6	24	48	10	M10x1.25	M6x1.0 深 depth 9	6.6	1/8	13.5	4.5	24	10

* 对于 KC(D)UK(W)16-5D (即行程 5mm): GA=14.5。For KC(D)UK(W)16-5D (ie.5mm stroke length): GA=14.5.

自由安装气缸
Free Mount Air Cylinder
Series KCU

外形尺寸图 Dimensions (mm)

KC(D)UK-S

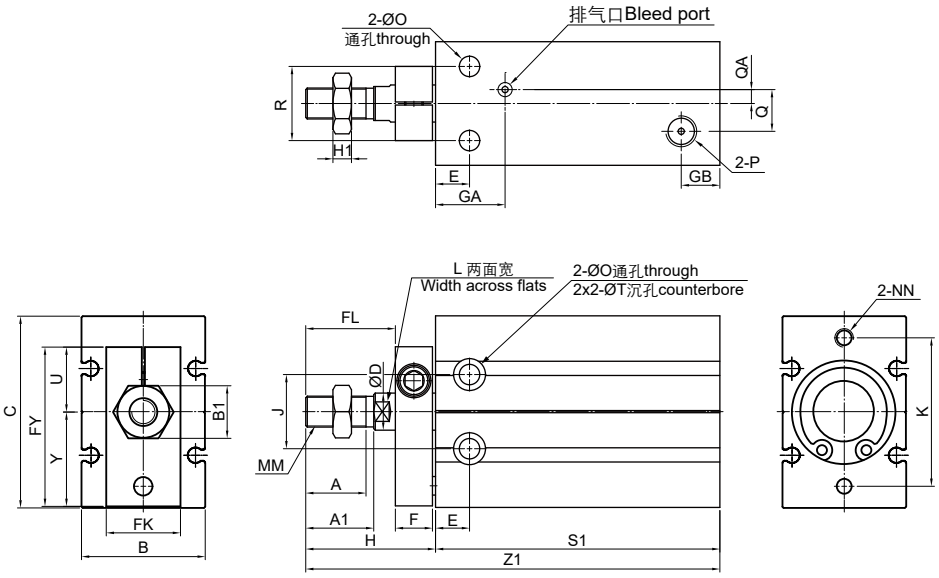

缸径 Bore size	KCUK-S					
	S1			Z1		
	ST=5	ST=10	ST=15	ST=5	ST=10	ST=15
6	38	43	48	56	61	66
10	41	46	56	62	67	77
16	35	40	50	61	66	76
20	41	46	56	70	75	85
25	45	50	60	78	83	93
32	47	52	62	89	94	104

缸径 Bore size	KCDUK-S					
	S1			Z1		
	ST=5	ST=10	ST=15	ST=5	ST=10	ST=15
6	38	43	48	56	61	66
10	41	46	56	62	67	77
16	45	50	60	71	76	86
20	51	56	66	80	85	95
25	55	60	70	88	93	103
32	57	62	72	99	104	114

KC(D)UK-T

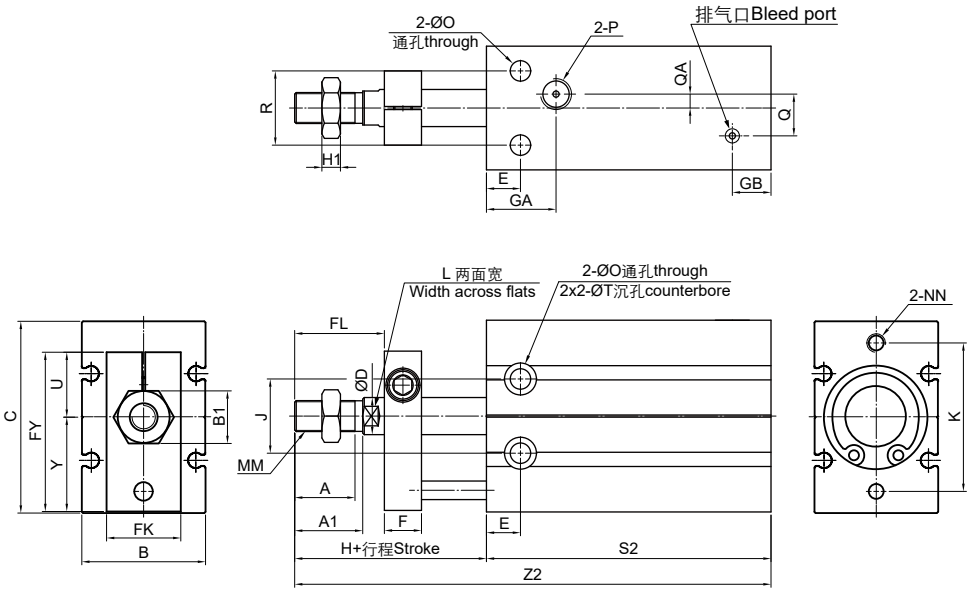

缸径 Bore size	KCUK-T					
	S2			Z2		
	ST=5	ST=10	ST=15	ST=5	ST=10	ST=15
6	38	43	48	61	71	81
10	41	46	56	67	77	92
16	45	50	60	76	86	101
20	41	46	56	75	85	100
25	45	50	60	83	93	108
32	47	52	62	94	104	119

缸径 Bore size	KCDUK-T					
	S2			Z2		
	ST=5	ST=10	ST=15	ST=5	ST=10	ST=15
6	38	43	48	61	71	81
10	41	46	56	67	77	92
16	45	50	60	76	86	101
20	51	56	66	85	95	110
25	55	60	70	93	103	118
32	57	62	72	104	114	129

缸径 Bore size	A	A1	B	B1	C	D	E	F	FL	FK	FY	GA	GB	H	H1	J	K	L	MM	NN	O	P	Q	QA	R	T	U	Y
6	7	-	13	5.5	22	3	7	8	9	11	20.5	15	10	18	2-1.8	10	17	-	M3x0.5	M3x0.5 深 depth 5	3.2	M5x0.8	-	-	7	6 深 depth 4.8	10	10.5
10	10	-	15	7	24	4	7	8	12	12	22	16.5	10	21	2-2.4	11	18	-	M4x0.7	M3x0.5 深 depth 5	3.2	M5x0.8	-	-	9	6 深 depth 5	10.5	11.5
16	11	12.5	20	8	32	6	7	8	17	13	28	16.5	11.5	26	4	14	25	5	M5x0.8	M4x0.7 深 depth 6	4.5	M5x0.8	4	2	12	7.6 深 depth 6.5	12.5	15.5
20	12	14	26	10	40	8	9	8	20	16	33	19	12.5	29	5	16	30	6	M6x1.0	M5x0.8 深 depth 8	5.5	M5x0.8	9	4.5	16	9.3 深 depth 8	13.5	19.5
25	15.5	18	32	13	50	10	10	10	22	20	43.5	21.5	13.5	33	5	20	38	8	M8x1.25	M5x0.8 深 depth 8	5.5	M5x0.8	9	4.5	20	9.3 深 depth 9	19	24.5
32	19.5	22	40	17	62	12	11	12	29	24	51.5	23	12.5	42	6	24	48	10	M10x1.25	M6x1.0 深 depth 9	6.6	1/8	13.5	4.5	24	11 深 depth 11.5	21	30.5

ARK

平板式气缸
Plate Air Cylinder
Series KMUB (Ø25~Ø63)

规格 Specifications

缸径 Bore size (mm)	25	32	40	50	63
接管口径 Port size Rc(PT)	M5x0.8	1/8		1/4	
使用流体 Fluid	过滤压缩空气 Filtered compressed air				
动作形式 Action	双动 Double acting				
保证耐压力 Proof pressure (MPa)	1.05				
使用压力范围 Operating pressure range (MPa)	0.05~0.7				
环境及流体温度 Ambient and fluid temperature	-5~60℃ (未冻结 No freezing)				
活塞速度 Piston speed	50~500 mm/s				
缓冲 Cushion	橡胶缓冲 Rubber bumper				
行程公差 Stroke tolerance (mm)	$^{+1.4}_{0}$				
活塞杆不回转精度 Rod non-rotating accuracy	±0.1°	±0.8°	±0.5°		
* 润滑 Lubrication	不需要 Not required				

* 如需要润滑请使用透平 1 号油 ISOVG32。Please use Turbine oil 1st Grade ISOVG32 if necessary.

行程 / 磁性开关 Stroke/ Auto switch

缸径 Bore size (mm)	标准行程 Standard stroke (mm)	磁性开关 Auto switch	开关固定码 Switch clamp
25, 32, 40, 50, 63	5, 10 ,15, 20, 25, 30, 35, 40, 45, 50, 75, 100, 125, 150, 175, 200, 250, 300	ST ≤ 10 mm: D-Z80VK	-
		ST>10 mm: D-M9BK	KMUZ-025

型号表示方法 How to Order

KM [D] U [W] B [25] - [50] [D] [M]

磁环 Magnet

-	无 None
D	内置磁环 Built-in magnet

活塞杆形式 Rod type

-	单活塞杆 Single rod
W	双活塞杆 Double rod

缸径 Bore size (mm)

行程 Stroke (mm)

动作形式 Action

D	双动 Double acting

杆端螺纹 Rod end thread

-	杆端内螺纹 Rod end female thread
M	杆端外螺纹 Rod end male thread

3

平板式气缸
Plate Air Cylinder
Series KMUB

外形尺寸图 Dimensions (mm)

KM(D)UB

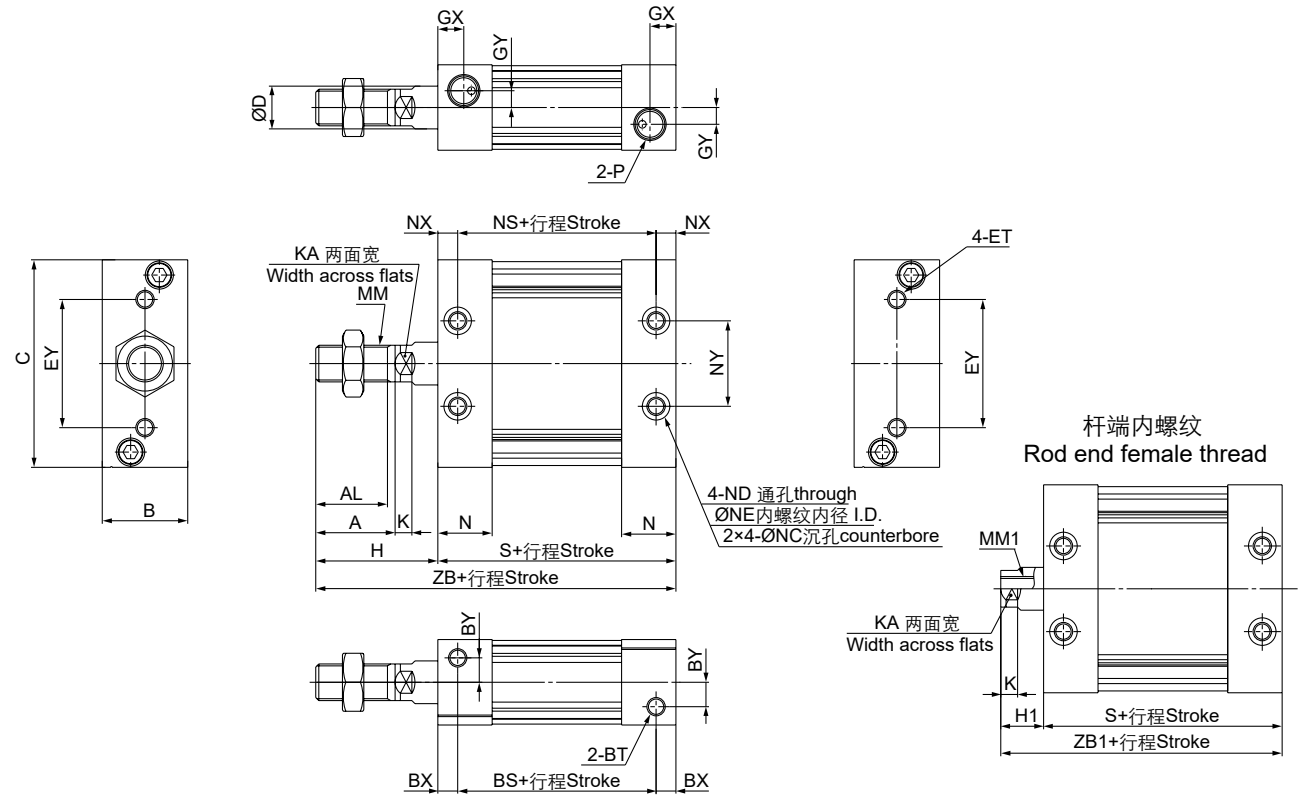

KM(D)UWB

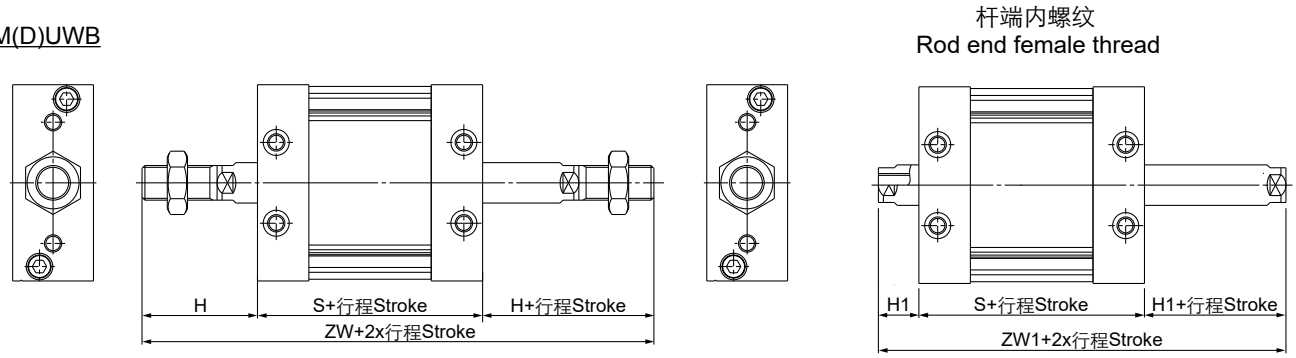

缸径 Bore size	A	AL	B	BS	BT	BX	BY	C	D	ET	EY	GX	GY	H	H1	K	KA	MM
25	22	19.5	24	37	M5x0.8 深 depth 7.5	9	7	54	12	M5x0.8 深 depth 11	26	10	5	36	14	5.5	10	M10x1.25
32	26	23.5	28	45	M6x1.0 深 depth 12	6.5	8	68	14	M6x1.0 深 depth 11	42	8.5	5.5	40	14	5.5	12	M12x1.25
40	30	27	32	44	M8x1.25 深 depth 13	8	9	86	16	M8x1.25 深 depth 11	54	9	7	45	15	6	14	M14x1.5
50	35	32	39	54	M10x1.5 深 depth 14.5	10	9	104	20	M10x1.5 深 depth 15	64	11.5	8	53	18	7	18	M18x1.5
63	35	32	50	53	M12x1.75 深 depth 18	11	12	124	20	M12x1.75 深 depth 15	72	11.5	10	56	21	7	18	M18x1.5

缸径 Bore size	MM1	N	NC	ND	NE	NS	NX	NY	P	S	ZB	ZB1	ZW	ZW1
25	M6x1.0 深 depth 12	16.5	7.5 深 depth 4.5	M5x0.8	4.3	43	6	26	M5x0.8	55	91	69	127	83
32	M8x1.25 深 depth 13	18	9 深 depth 5.5	M6x1.0	5.1	45	6.5	28	1/8	58	98	72	138	86
40	M8x1.25 深 depth 13	18.5	10.5 深 depth 6.5	M8x1.25	6.9	44	8	36	1/8	60	105	75	150	90
50	M10x1.5 深 depth 15	24	13.5 深 depth 8.5	M10x1.5	8.7	54	10	42	1/4	74	127	92	180	110
63	M10x1.5 深 depth 15	24	17 深 depth 10.5	M12x1.75	10.5	53	11	46	1/4	75	131	96	187	117

* 双活塞杆基本型未标注尺寸与单活塞杆基本型相同。
The unmentioned dimensions of double rod basic type are same as the single rod basic type.

ARK 磁耦式无杆气缸
Magnetically Coupled Rodless Air Cylinder
Series KCY3B (Ø15~Ø40)

规格 Specifications

缸径 Bore size (mm)	15	20	25	32	40
接管口径 Port size Rc(PT)	M5x0.8	1/8			1/4
使用流体 Fluid	过滤压缩空气 Filtered compressed air				
动作形式 Action	双动 Double acting				
保证耐压力 Proof pressure (MPa)	1.05				
使用压力范围 Operating pressure range (MPa)	0.16~0.7		0.15~0.7		
环境及流体温度 Ambient and fluid temperature	-5~60℃ (未冻结 No freezing)				
磁性保持力 Magnet holding force (N)	137	231	363	588	922
活塞速度 Piston speed	50~500 mm/s				
缓冲 Cushion	橡胶缓冲 Rubber bumper				
行程公差 Stroke tolerance (mm)	~250: $^{+1.0}_{0}$	251~1000: $^{+1.4}_{0}$		1001~: $^{+1.8}_{0}$	
* 润滑 Lubrication	不需要 Not required				

* 如需要润滑请使用透平 1 号油 ISOVG32。Please use Turbine oil 1st Grade ISOVG32 if necessary.

型号表示方法 How to Order

KCY3B **20** - **300**

缸径 Bore size (mm) — 行程 Stroke (mm)

行程 / 磁性开关 Stroke/ Auto switch

缸径 Bore size (mm)	标准行程 Standard stroke (mm)	最长行程 Max. stroke (mm)
15	50, 100, 150, 200, 250, 300, 350, 400, 450, 500	1000
20	100, 150, 200, 250, 300, 350, 400, 450, 500, 600, 700, 800	1500
25, 32		3000
40	100, 150, 200, 250, 300, 350, 400, 450, 500, 600, 700, 800, 900, 1000	3000

* 非标行程可定制。Nonstandard stroke can be customized.

外形尺寸图 Dimensions (mm)

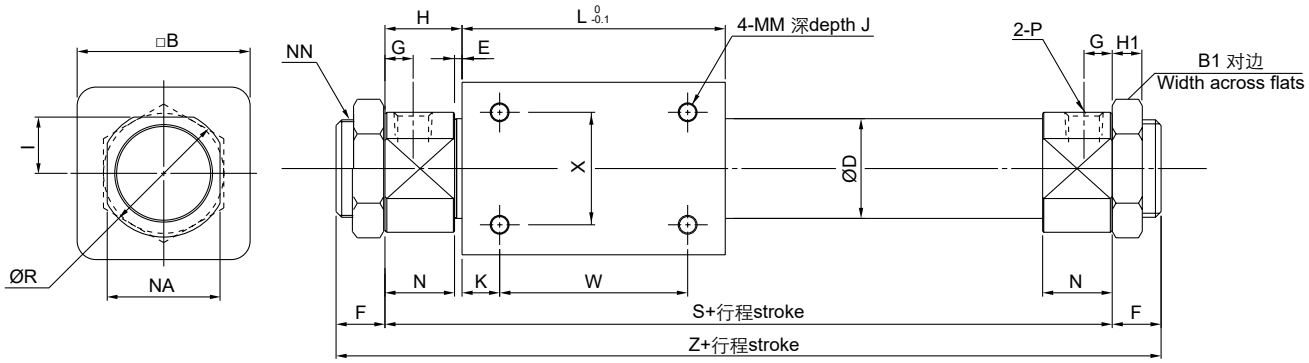

缸径 Bore size	B	B1	D	E	F	G	H	H1	I	J	K	L	MM	N	NA	NN	P	R	S	W	X	Z
15	35	14	16.6	2	10	5.5	13	4	-	6	11	57	M4x0.7	11	17	M10x1	M5x0.8	-	83	35	19	103
20	36	26	21.6	2	13	7.5	20	8	12	6	8	66	M4x0.7	18	24	M20x1.5	1/8	28	106	50	25	132
25	46	32	26.4	2	13	7.5	20.5	8	15	8	10	70	M5x0.8	18.5	30	M26x1.5	1/8	34	111	50	30	137
32	60	32	33.6	2	16	8	22	8	18	8	15	80	M6x1.0	20	36	M26x1.5	1/8	40	124	50	40	156
40	70	41	41.6	3	16	11	29	10	23	10	16	92	M6x1.0	26	46	M32x2	1/4	50	150	60	40	182

ARK

磁耦式无杆气缸(直接安装)
Magnetically Coupled Rodless Air Cylinder (Direct Mounting)
Series KCY3R (Ø6~Ø63)

规格 Specifications

缸径 Bore size (mm)	6	10	15	20	25	32	40	50	63
接管口径 Port size Rc(PT)	M3x0.5	M5x0.8		1/8			1/4		
使用流体 Fluid	过滤压缩空气 Filtered compressed air								
保证耐压力 Proof pressure (MPa)	1.05								
最高使用压力 Max. operating pressure (MPa)	0.7								
最低使用压力 Min. operating pressure (MPa)	0.16	0.16	0.16	0.16	0.15	0.14	0.12	0.12	0.12
环境及流体温度 Ambient and fluid temperature	0~60℃ (未冻结 No freezing)								
*1) 活塞速度 Piston speed	50~500 mm/s								
缓冲 Cushion	橡胶缓冲 Rubber bumper								
行程公差 Stroke tolerance (mm)	~250: $^{+1.0}_{0}$ 251~1000: $^{+1.4}_{0}$ 1001~: $^{+1.8}_{0}$								
磁性保持力 Magnet holding force (N)	19.6	53.9	137	231	363	588	922	1471	2256
润滑 Lubrication	不需要 Not required								
*2) 安装方式	水平 , 倾斜 , 垂直 Horizontal, inclined, vertical								

*1). 当磁性开关安装在中间位置时，活塞的最大速度应在 300mm/s 以下。
When an auto switch is installed at an intermediate position, keep the maximum piston speed at 300mm/s or below.

2). 垂直安装的情况下，不能靠气动回路实现中停。When vertically mounting, it is impossible to perform an intermediate stop by means of a pneumatic circuit.

行程 / 磁性开关 Stroke/ Auto switch

缸径 Bore size (mm)	标准行程 Standard stroke (mm)	最长行程 Max. stroke (mm) 不带开关 Without switch	最长行程 Max. stroke (mm) 带开关 With switch	磁性开关 Auto Switch	开关固定码 Switch clamp
6	50, 100, 150, 200	300	300	D-M9BK	-
10	50, 100, 150, 200, 250, 300	500	500		
15	50, 100, 150, 200, 250, 300, 350, 400, 450, 500	1000	1000		
20	100, 150, 200, 250, 300, 350, 400, 450, 500, 600, 700, 800	1500	1000		
25			1200		PS
32		2000	2000		
40	100, 150, 200, 250, 300, 350, 400, 450, 500, 600, 700, 800, 900, 1000				
50					
63					

型号表示方法 How to Order

KCY3R [ ] [20] - [300] [ ]

- 配管类型 Piping type

-	两侧配管 Bilateral piping
G	集中配管 Centralized piping (Ø6 除外 Not available for Ø6)

- 缸径 Bore size (mm)
- 行程 Stroke (mm)
- 开关导轨 Switch rail

-	带开关导轨 With switch rail
N	不带开关导轨 Without switch rail

3

磁耦式无杆气缸(直接安装)
Magnetically Coupled Rodless Air Cylinder (Direct Mounting)
Series KCY3R

外形尺寸图 Dimensions (mm)

KCY3R (Ø6~Ø63)

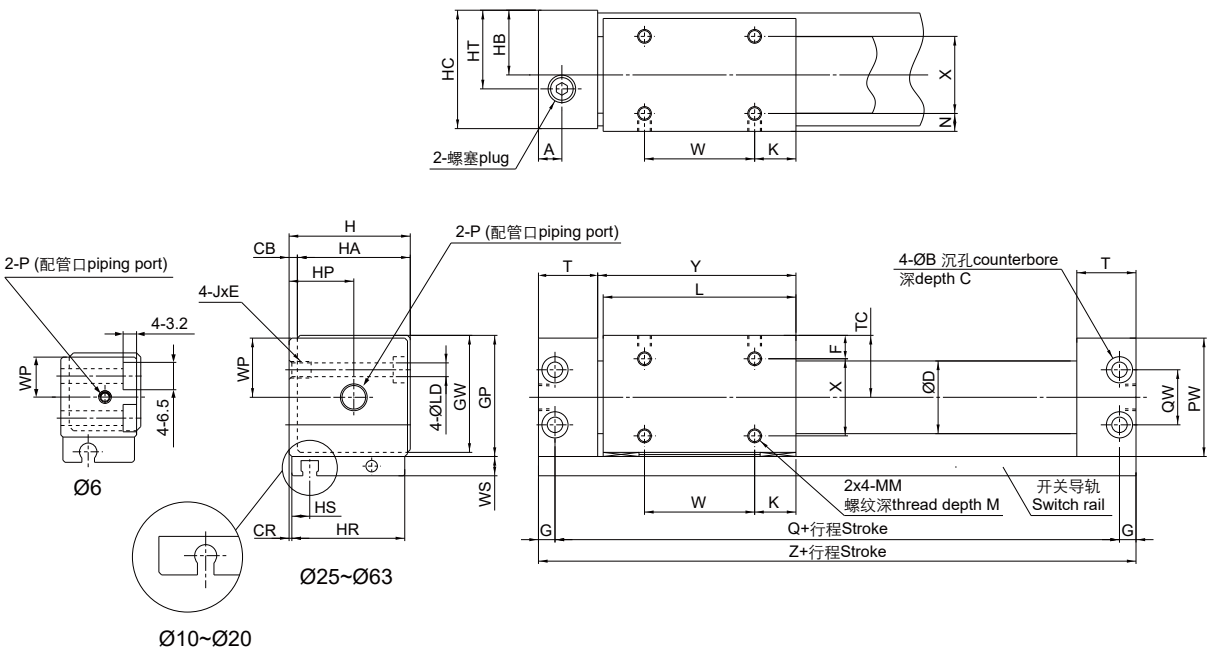

缸径 Bore size	A	B	C	CB	CR	D	F	G	GP	GW	H	HA	HB	HC	HP	HR	HS	HT	J	E	K	L	LD	M	MM
6	7	-	-	2	0.5	7.6	5.5	3	20	18.5	19	17	10.5	18	10.5	17	6	10.5	M4x0.7	6	7	$34^{0}_{-0.1}$	3.5	3.5	M3x0.5
10	9	6.5	3.2	2	0.5	12	6.5	4	27	25.5	26	24	14	25	14	24	5	14	M4x0.7	6	9	$38^{0}_{-0.1}$	3.5	4	M3x0.5
15	10.5	8	4.2	2	0.5	16.6	8	5	33	31.5	32	30	17	31	17	30	8.5	17	M5x0.8	7	14	$53^{0}_{-0.1}$	4.3	5	M4x0.7
20	9	9.5	5.2	3	1	21.6	9	6	39	37.5	39	36	21	38	24	36	7.5	24	M6x1.0	8	11	$62^{0}_{-0.1}$	5.4	5	M4x0.7
25	8.5	9.5	5.2	3	1	26.4	8.5	6	44	42.5	44	41	23.5	43	23.5	41	6.5	23.5	M6x1.0	8	15	$70^{0}_{-0.1}$	5.4	6	M5x0.8
32	10.5	11	6.5	3	1.5	33.6	10.5	7	55	53.5	55	52	29	54	29	51	7	29	M8x1.25	10	13	$76^{0}_{-0.1}$	7	7	M6x1.0
40	10	11	6.5	5	2	41.6	13	7	65	63.5	67	62	36	66	36	62	8	36	M8x1.25	10	15	$90^{0}_{-0.1}$	7	8	M6x1.0
50	14	14	8.2	5	2	52.4	17	8.5	83	81.5	85	80	45	84	45	80	9	45	M10x1.5	15	25	$110^{0}_{-0.2}$	8.6	10	M8x1.25
63	15	14	8.2	5	3	65.4	18	8.5	95	93.5	97	92	51	96	51	90	9.5	51	M10x1.5	15	24	$118^{0}_{-0.2}$	8.6	10	M8x1.25

缸径 Bore size	N	P	PW	Q	QW	T	TC	W	WP	WS	X	Y	Z
6	3.5	M3x0.5	19	60	10	14.5	10.5	20	9.5	6	10	35.5	66
10	4.5	M5x0.8	26	68	14	17.5	14	20	13	8	15	39.5	76
15	6	M5x0.8	32	84	18	19	17	25	16	7	18	54.5	94
20	7	1/8	38	95	17	20.5	20	40	19	7	22	64	107
25	6.5	1/8	43	105	20	21.5	22.5	40	21.5	7	28	72	117
32	8.5	1/8	54	116	26	24	28	50	27	7	35	79	130
40	11	1/4	64	134	34	26	33	60	32	7	40	93	148
50	15	1/4	82	159	48	30	42	60	41	10	50	113	176
63	16	1/4	94	171	60	32	48	70	47	10	60	121	188

磁耦式无杆气缸(直接安装)
Magnetically Coupled Rodless Air Cylinder (Direct Mounting)
Series KCY3R

外形尺寸图 Dimensions (mm)

KCY3RG (Ø10~Ø63)

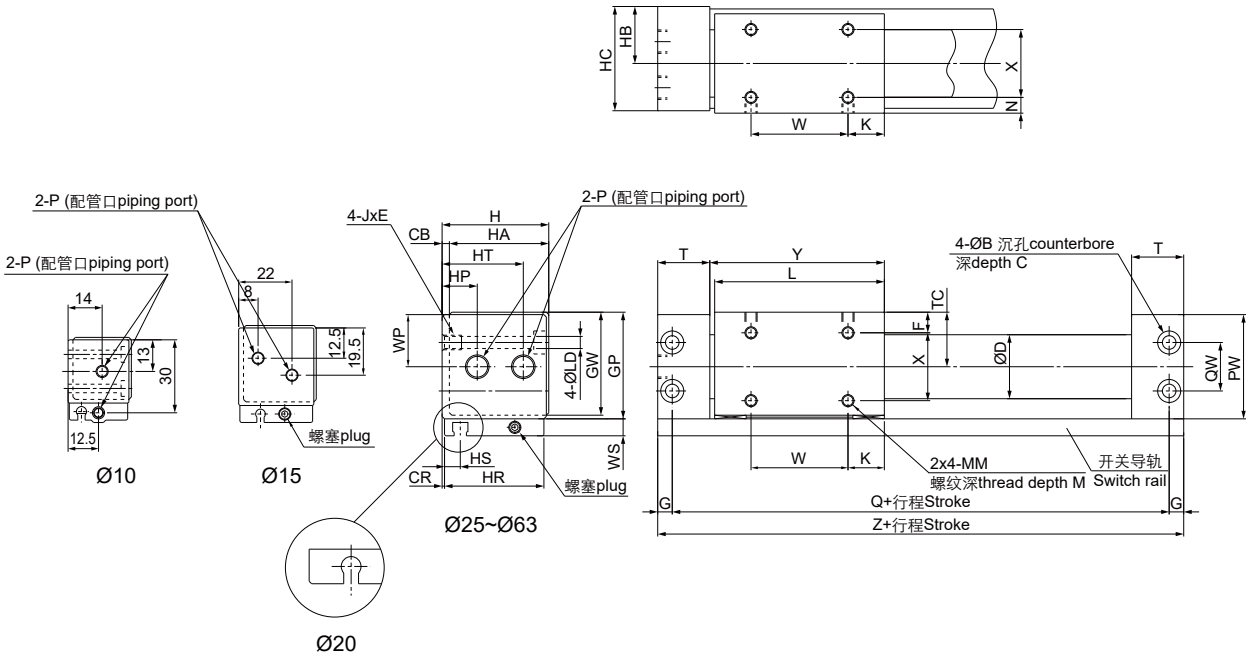

缸径 Bore size	B	C	CB	CR	D	F	G	GP	GW	H	HA	HB	HC	HP	HR	HS	HT	J	E	K	L	LD	M	MM	N
10	6.5	3.2	2	0.5	12	6.5	4	27	25.5	26	24	14	25	-	24	5	-	M4x0.7	6	9	$38^{0}_{-0.1}$	3.5	4	M3x0.5	4.5
15	8	4.2	2	0.5	16.6	8	5	33	31.5	32	30	17	31	-	30	8.5	-	M5x0.8	7	14	$53^{0}_{-0.1}$	4.3	5	M4x0.7	6
20	9.5	5.2	3	1	21.6	9	6	39	37.5	39	36	21	38	11	36	7.5	28	M6x1.0	8	11	$62^{0}_{-0.1}$	5.4	5	M4x0.7	7
25	9.5	5.2	3	1	26.4	8.5	6	44	42.5	44	41	23.5	43	14.5	41	6.5	33.5	M6x1.0	8	15	$70^{0}_{-0.1}$	5.4	6	M5x0.8	6.5
32	11	6.5	3	1.5	33.6	10.5	7	55	53.5	55	52	29	54	20	51	7	41	M8x1.25	10	13	$76^{0}_{-0.1}$	7	7	M6x1.0	8.5
40	11	6.5	5	2	41.6	13	7	65	63.5	67	62	36	66	25	62	8	50	M8x1.25	10	15	$90^{0}_{-0.1}$	7	8	M6x1.0	11
50	14	8.2	5	2	52.4	17	8.5	83	81.5	85	80	45	84	32	80	9	56	M10x1.5	15	25	$110^{0}_{-0.2}$	8.6	10	M8x1.25	15
63	14	8.2	5	3	65.4	18	8.5	95	93.5	97	92	51	96	35	90	9.5	63.5	M10x1.5	15	24	$118^{0}_{-0.2}$	8.6	10	M8x1.25	16

缸径 Bore size	P	PW	Q	QW	T	TC	W	WP	WS	X	Y	Z
10	M5x0.8	26	68	14	17.5	14	20	13	8	15	39.5	76
15	M5x0.8	32	84	18	19	17	25	16	7	18	54.5	94
20	1/8	38	95	17	20.5	20	40	19	7	22	64	107
25	1/8	43	105	20	21.5	22.5	40	21.5	7	28	72	117
32	1/8	54	116	26	24	28	50	27	7	35	79	130
40	1/4	64	134	34	26	33	60	32	7	40	93	148
50	1/4	82	159	48	30	42	60	41	10	50	113	176
63	1/4	94	171	60	32	48	70	47	10	60	121	188

ARK

磁耦式无杆气缸(滑动轴承)
Magnetically Coupled Rodless Air Cylinder (Slide Bearing)
Series KCY1S (Ø6~Ø40)

规格 Specifications

缸径 Bore size (mm)	6	10	15	20	25	32	40
接管口径 Port size Rc(PT)	M3x0.5	M5x0.8		1/8			1/4
使用流体 Fluid	过滤压缩空气 Filtered compressed air						
动作形式 Action	双动 Double acting						
保证耐压力 Proof pressure (MPa)	1.05						
使用压力范围 Operating pressure range (MPa)	0.18~0.7						
环境及流体温度 Ambient and fluid temperature	-10~60℃ (未冻结 No freezing)						
磁性保持力 Magnet holding force (N)	19.6	53.9	137	231	363	588	922
活塞速度 Piston speed	50~400 mm/s						
缓冲 Cushion	橡胶缓冲 / 油压缓冲器 Rubber bumper/ Shock absorber						
行程公差 Stroke tolerance (mm)	~250: $^{+1.0}_{0}$		251~1000: $^{+1.4}_{0}$		1001~: $^{+1.8}_{0}$		
* 润滑 Lubrication	不需要 Not required						

* 如需要润滑请使用透平 1 号油 ISOVG32。Please use Turbine oil 1st Grade ISOVG32 if necessary.

行程 / 磁性开关 Stroke/ Auto switch

缸径 Bore size (mm)	标准行程 Standard stroke (mm)	最长行程 Max. stroke (mm)	磁性开关 Auto Switch	开关固定码 Switch clamp
6	50, 100, 150, 200	300	D-M9BK	KMUZ-025
10	50, 100, 150, 200, 250, 300	500		
15	50, 100, 150, 200, 250, 300, 350, 400, 450, 500	750		
20	100, 150, 200, 250, 300, 350, 400, 450, 500, 600, 700, 800	1000		
25, 32		1500		
40	100, 150, 200, 250, 300, 350, 400, 450, 500, 600, 700, 800, 900, 1000	1500		

* 非标行程可定制。Nonstandard stroke can be customized.

3

型号表示方法 How to Order

KCY1S [ ] [20] - [300] [ ]

- 配管类型 Piping type

-	两侧配管 Bilateral piping
G	集中配管 Centralized piping

- 缸径 Bore size (mm)
- 行程 Stroke (mm)
- 停止方式 Stopper type

-	两侧缓冲螺栓 Bumper bolt on both sides
B	两侧油压缓冲器 / 调节螺栓 Shock absorber/ adjustment bolt on both sides
BS	一侧油压缓冲器 / 调节螺栓，另一侧缓冲螺栓 Shock absorber/ adjustment bolt on one side, bumper bolt on the other side.

磁耦式无杆气缸(滑动轴承)
Magnetically Coupled Rodless Air Cylinder (Slide Bearing)
Series KCY1S

外形尺寸图 Dimensions (mm)

KCY1S

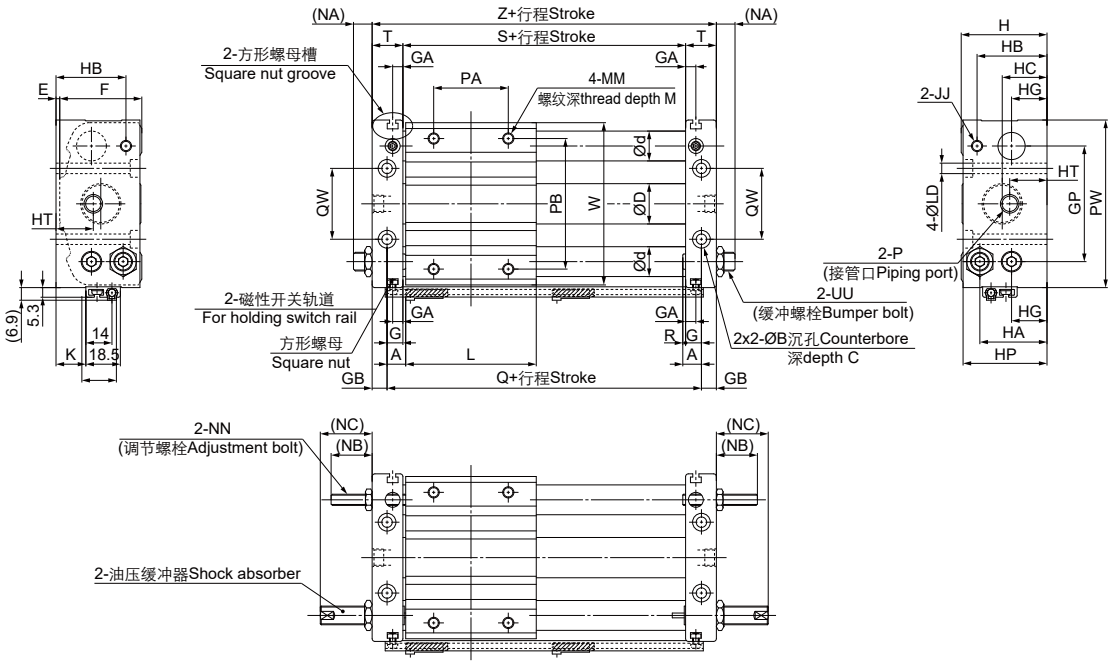

行程调节总量 Amount of stroke adjustment

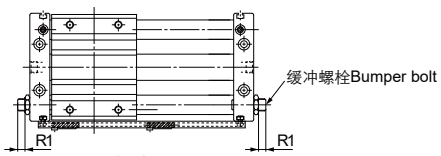

带缓冲螺栓
With bumper bolt

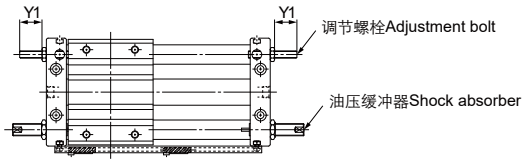

带油压缓冲器
With shock absorber

缸径 Bore size	A	B	C	D	d	E	F	G	GA	GB	GP	H	HA	HB	HC	HG	HP	HT	JJ	K	L	LD	M	MM	NA	NB	NC
6	6	6.5	3.3	7.6	8	2	25	5	5	5	30	27	20.5	20.5	15.5	8	26	15.5	M4x0.7	3	40	3.5	6	M4x0.7	11	14	19
10	7.5	8	4.4	12	10	2.5	31.5	6.5	5	6	40	34	25	27	17	13.5	33	17	M4x0.7	6	45	4.6	6	M4x0.7	10.5	16.5	28
15	7.5	9.5	5.4	16.6	12	2	38	6.5	5	6	52	40	28	29.5	20.5	15	39	20.5	M4x0.7	11	60	5.8	8	M5x0.8	10.5	16.5	28
20	10	9.5	5.4	21.6	16	2	44	8.5	5.5	8	62	46	36	37.5	24	19	45	20	M6x1.0	16	70	5.8	10	M6x1.0	10.5	22	28
25	10	11	6.5	26.4	16	2	52	8.5	5.5	8	70	54	40.5	40.5	27.5	21.5	53	21	M6x1.0	20	70	7	10	M6x1.0	12.5	22	49
32	12.5	14	8.6	33.6	20	2	64	9.5	5.5	9	86	66	50	50	33	26	64	24	M8x1.25	26	85	9	12	M8x1.25	11.5	23.5	52
40	12.5	14	8.6	41.6	25	2	74	10.5	5.5	10	104	76	55.5	55.5	38	27	74	27	M8x1.25	28	95	9	12	M8x1.25	10.5	22.5	51

缸径 Bore size	NN	P	PA	PB	PW	Q	QW	R	R1	S	T	UU	W	Y1	Z
6	M4x0.7	M3x0.5	25	25	49	52	16	1	7.5	42	10	M6x0.75	46	11.5	62
10	M4x0.7	M5x0.8	25	38	61	60	24	1	5.5	47	12.5	M8x1	58	14	72
15	M4x0.7	M5x0.8	30	50	76	75	30	1	5.5	62	12.5	M8x1	73	14	87
20	M6x1.0	1/8	40	70	90	90	38	1.5	4.5	73	16.5	M10x1	87	18.5	106
25	M6x1.0	1/8	40	70	99	90	42	1.5	4.5	73	16.5	M14x1.5	96	18.5	106
32	M8x1.25	1/8	40	75	119	110	50	3	5.5	91	18.5	M20x1.5	116	18.5	128
40	M8x1.25	1/4	65	105	142	120	64	2	4.5	99	20.5	M20x1.5	139	17.5	140

磁耦式无杆气缸(滑动轴承)
Magnetically Coupled Rodless Air Cylinder (Slide Bearing)
Series KCY1S

外形尺寸图 Dimensions (mm)

KCY1SG

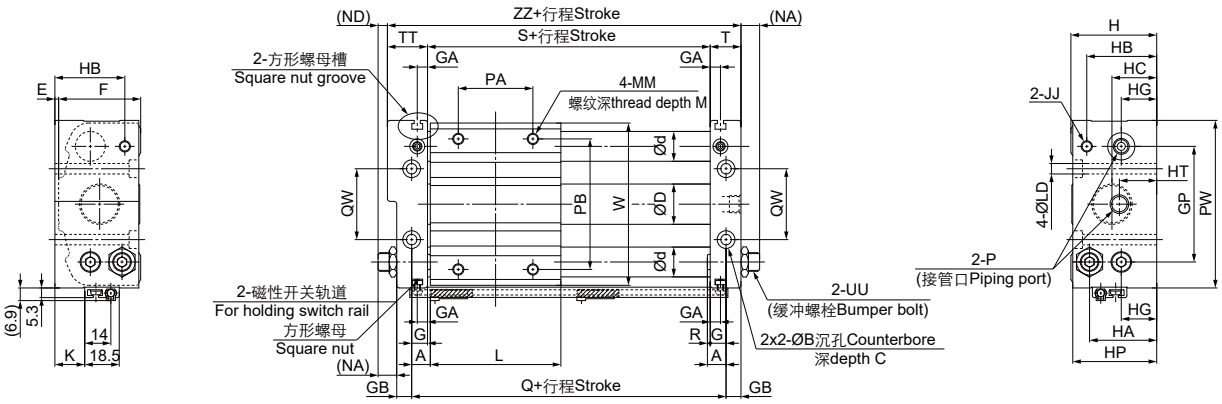

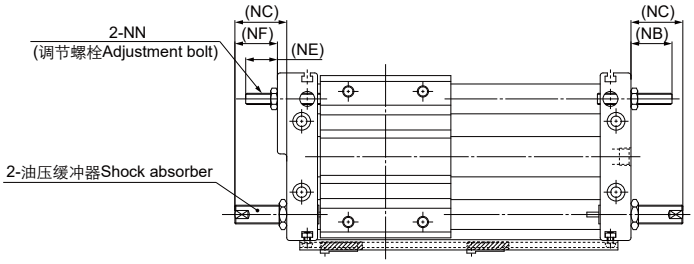

行程调节总量 Amount of stroke adjustment

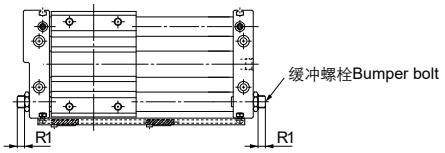

带缓冲螺栓
With bumper bolt

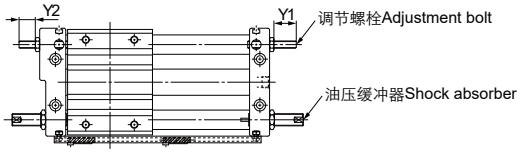

带油压缓冲器
With shock absorber

缸径 Bore size	A	B	C	D	d	E	F	G	GA	GB	GP	H	HA	HB	HC	HG	HP	HT	JJ	K	L	LD	M	MM	NA	NB	NC
6	6	6.5	3.3	7.6	8	2	25	5	5	5	30	27	20.5	20.5	15.5	8	26	15.5	M4x0.7	3	40	3.5	6	M4x0.7	11	14	19
10	7.5	8	4.4	12	10	2.5	31.5	6.5	5	6	40	34	25	27	17	13.5	33	17	M4x0.7	6	45	4.6	6	M4x0.7	10.5	16.5	28
15	7.5	9.5	5.4	16.6	12	2	38	6.5	5	6	52	40	28	29.5	20.5	15	39	20.5	M4x0.7	11	60	5.8	8	M5x0.8	10.5	16.5	28
20	10	9.5	5.4	21.6	16	2	44	8.5	5.5	8	62	46	36	37.5	24	19	45	20	M6x1.0	16	70	5.8	10	M6x1.0	10.5	22	28
25	10	11	6.5	26.4	16	2	52	8.5	5.5	8	70	54	40.5	40.5	27.5	21.5	53	21	M6x1.0	20	70	7	10	M6x1.0	12.5	22	49
32	12.5	14	8.6	33.6	20	2	64	9.5	5.5	9	86	66	50	50	33	26	64	24	M8x1.25	26	85	9	12	M8x1.25	11.5	23.5	52
40	12.5	14	8.6	41.6	25	2	74	10.5	5.5	10	104	76	55.5	55.5	38	27	74	27	M8x1.25	28	95	9	12	M8x1.25	10.5	22.5	51

缸径 Bore size	ND	NE	NF	NN	P	PA	PB	PW	Q	QW	R	R1	S	T	TT	UU	W	Y1	Y2	ZZ
6	7	10	15	M4x0.7	M3x0.5	25	25	49	52	16	1	7.5	42	10	14	M6x0.75	46	11.5	7.5	66
10	6.5	12.5	24	M4x0.7	M5x0.8	25	38	61	60	24	1	5.5	47	12.5	16.5	M8x1	58	14	10	76
15	5.5	11.5	23	M4x0.7	M5x0.8	30	50	76	75	30	1	5.5	62	12.5	17.5	M8x1	73	14	9	92
20	5.5	17	23	M6x1.0	1/8	40	70	90	90	38	1.5	4.5	73	16.5	21.5	M10x1	87	18.5	13.5	111
25	7.5	17	44	M6x1.0	1/8	40	70	99	90	42	1.5	4.5	73	16.5	21.5	M14x1.5	96	18.5	13.5	111
32	5.5	17.5	46	M8x1.25	1/8	40	75	119	110	50	3	5.5	91	18.5	24.5	M20x1.5	116	18.5	12.5	134
40	4.5	16.5	45	M8x1.25	1/4	65	105	142	120	64	2	4.5	99	20.5	26.5	M20x1.5	139	17.5	11.5	146

ARK

滑台气缸(交叉滚柱导轨)
Air Slide Table (Cross Roller Guide)
Series KMXS (Ø6~Ø25)

规格 Specifications

缸径 Bore size (mm)	6	8	12	16	20	25
接管口径 Port size Rc(PT)	M3x0.5	M5x0.8			1/8	
使用流体 Fluid	过滤压缩空气 Filtered compressed air					
动作形式 Action	双动 Double acting					
使用压力范围 Operating pressure range (MPa)	0.15~0.7					
环境及流体温度 Ambient and fluid temperature	-5~60℃ (未冻结 No freezing)					
活塞速度 Piston speed	50~500 mm/s					
缓冲 Cushion	橡胶缓冲 (标准) Rubber bumper (Standard) 油压缓冲器 (可选) Shock absorber (Option)					
* 润滑 Lubrication	不需要 Not required					

* 如需要润滑请使用透平 1 号油 ISOVG32。Please use Turbine oil 1st Grade ISOVG32 if necessary.

行程 / 磁性开关 Stroke/ Auto switch

缸径 Bore size (mm)	标准行程 Standard stroke (mm)	磁性开关 / 轨道安装 Auto switch/ rail mounting
6	10, 20, 30, 40, 50	D-M9BK
8	10, 20, 30, 40, 50, 75	
12	10, 20, 30, 40, 50, 75, 100	
16	10, 20, 30, 40, 50, 75, 100, 125	
20, 25	10, 20, 30, 40, 50, 75, 100, 125, 150	

型号表示方法 How to Order

KMXS 12 - 50 ☐

缸径 Bore size (mm)

行程 Stroke (mm)

行程调整装置
Stroke adjuster

-	无 None
A	两端调程 Adjuster at both end
AS	前端调程 Adjuster at extension end
AT	后端调程 Adjuster at retraction end
*B	两端油压缓冲器 Shock absorber at both end
*BS	前端油压缓冲器 Shock absorber at extension end
*BT	后端油压缓冲器 Shock absorber at retraction end

*KMXS6 无油压缓冲。Shock absorber is not available for KMXS6.

滑台气缸(交叉滚柱导轨)
Air Slide Table (Cross Roller Guide)
Series KMXS

外形尺寸图 Dimensions (mm)

KMXS6

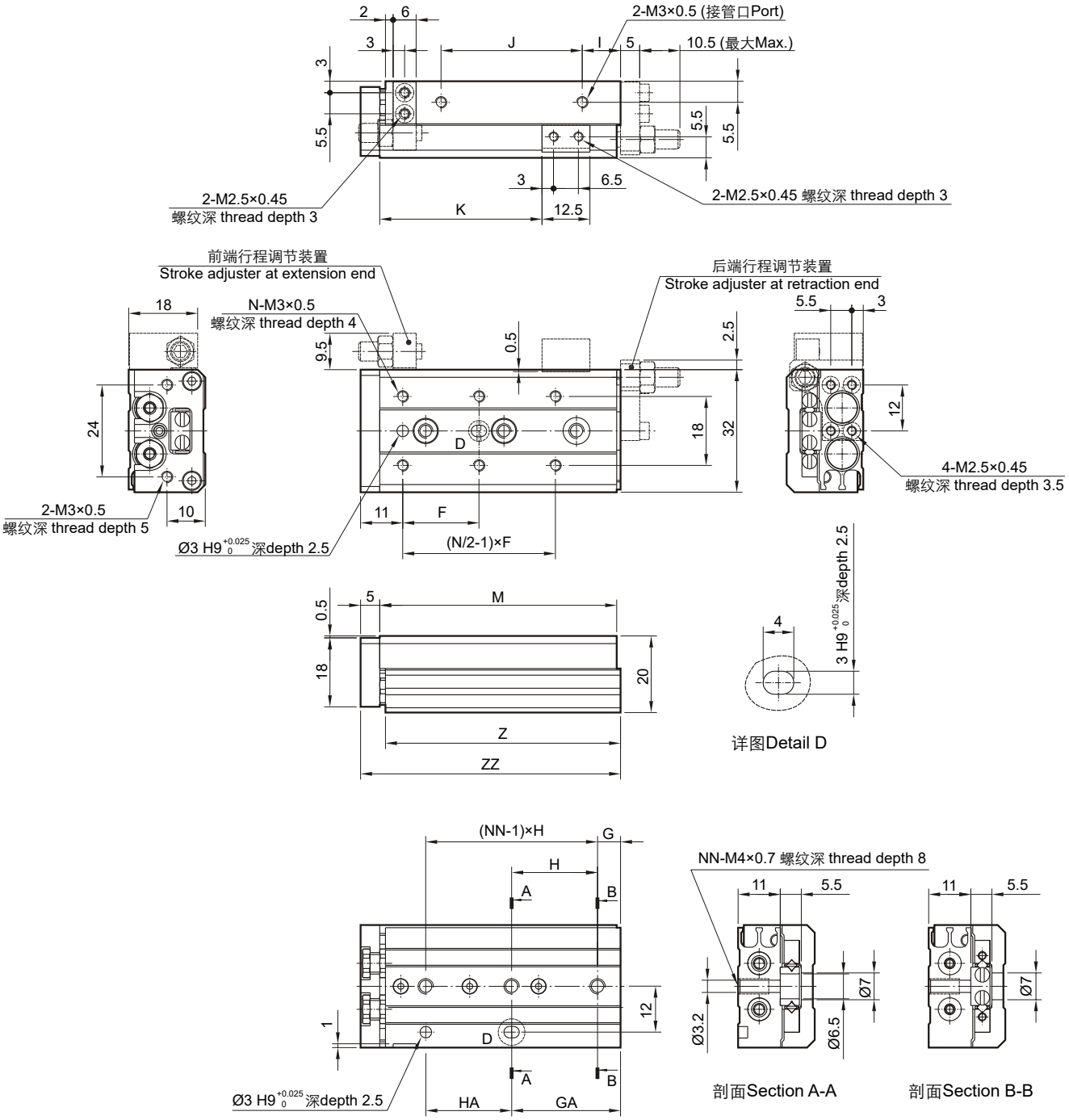

型号 Model	F	G	GA	H	HA	I	J	K	M	N	NN	Z	ZZ
KMXS6-10	20	6	11	25	20	10	17	22.5	42	4	2	41.5	48
KMXS6-20	30	6	21	35	20	10	27	32.5	52	4	2	51.5	58
KMXS6-30	20	11	31	20	20	7	40	42.5	62	6	3	61.5	68
KMXS6-40	28	13	43	30	30	19	50	52.5	84	6	3	83.5	90
KMXS6-50	38	17	41	24	48	25	60	62.5	100	6	4	99.5	106

滑台气缸(交叉滚柱导轨)
Air Slide Table (Cross Roller Guide)
Series KMXS

外形尺寸图 Dimensions (mm)

KMXS8

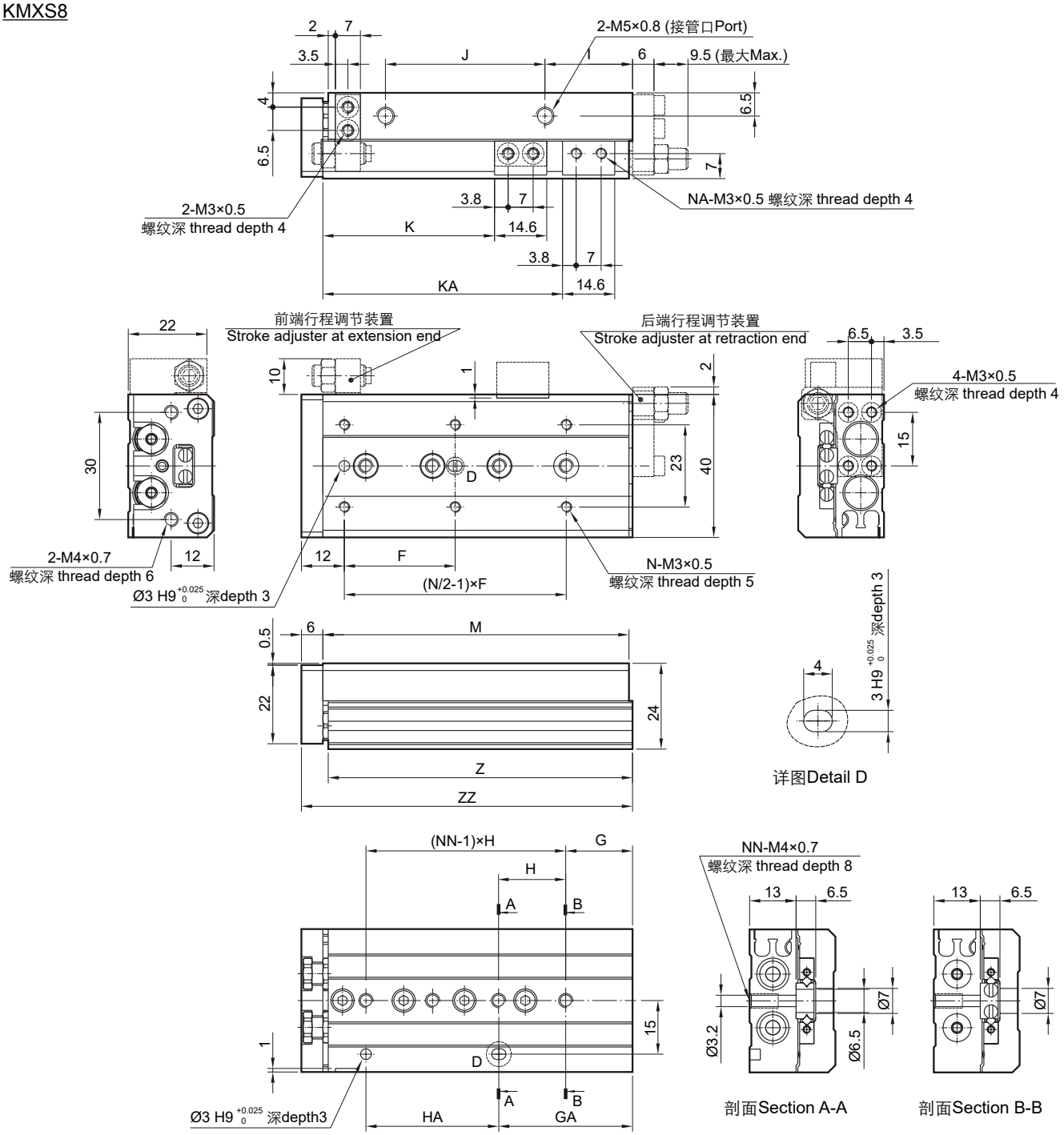

型号 Model	F	G	GA	H	HA	I	J	K	KA	M	N	NA	NN	Z	ZZ
KMXS8-10	25	9	17	28	20	13	19.5	23.5	-	49	4	2	2	48.5	56
KMXS8-20	25	12	12	30	30	8.5	29	33.5	-	54	4	2	2	53.5	61
KMXS8-30	40	13	33	20	20	9.5	39	43.5	-	65	4	2	3	64.5	72
KMXS8-40	50	15	43	28	28	10.5	56	53.5	-	83	4	2	3	82.5	90
KMXS8-50	38	20	43	23	46	24.5	60	63.5	82.5	101	6	4	4	100.5	108
KMXS8-75	50	27	83	28	56	38.5	96	88.5	132.5	151	6	4	5	150.5	158

滑台气缸(交叉滚柱导轨)
Air Slide Table (Cross Roller Guide)
Series KMXS

外形尺寸图 Dimensions (mm)

KMXS12

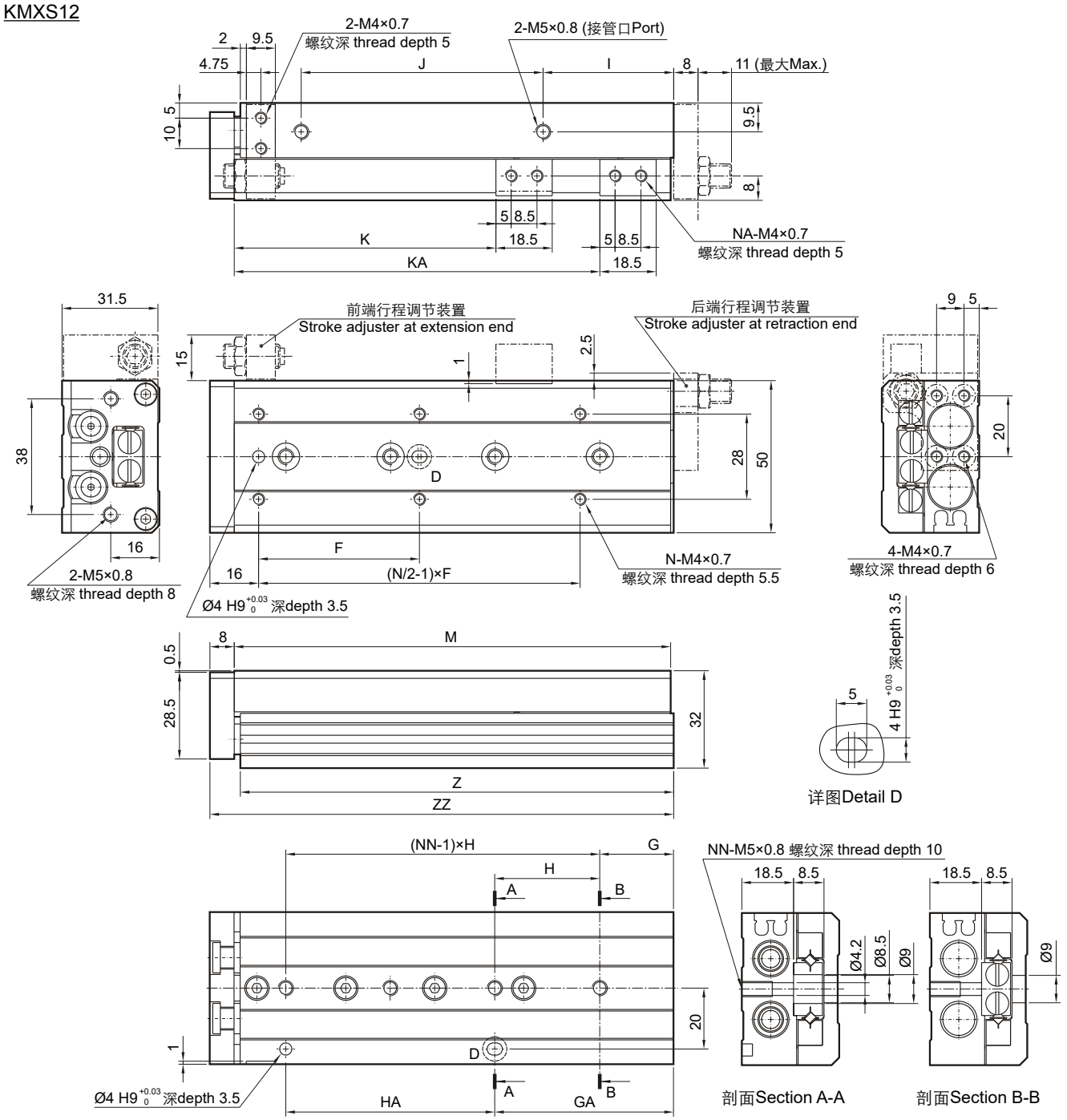

型号 Model	F	G	GA	H	HA	I	J	K	KA	M	N	NA	NN	Z	ZZ
KMXS12-10	35	15	15	40	40	10	40	26.5	-	71	4	2	2	70	80
KMXS12-20	35	15	15	40	40	10	40	36.5	-	71	4	2	2	70	80
KMXS12-30	35	15	15	40	40	10	40	46.5	-	71	4	2	2	70	80
KMXS12-40	50	17	42	25	25	10	52	56.5	-	83	4	2	3	82	92
KMXS12-50	35	15	51	36	36	22	60	66.5	-	103	6	2	3	102	112
KMXS12-75	55	25	61	36	72	43	85	91.5	125.5	149	6	4	4	148	158
KMXS12-100	65	35	111	38	76	52	130	116.5	179.5	203	6	4	5	202	212

滑台气缸(交叉滚柱导轨)
Air Slide Table (Cross Roller Guide)
Series KMXS

外形尺寸图 Dimensions (mm)

KMXS16

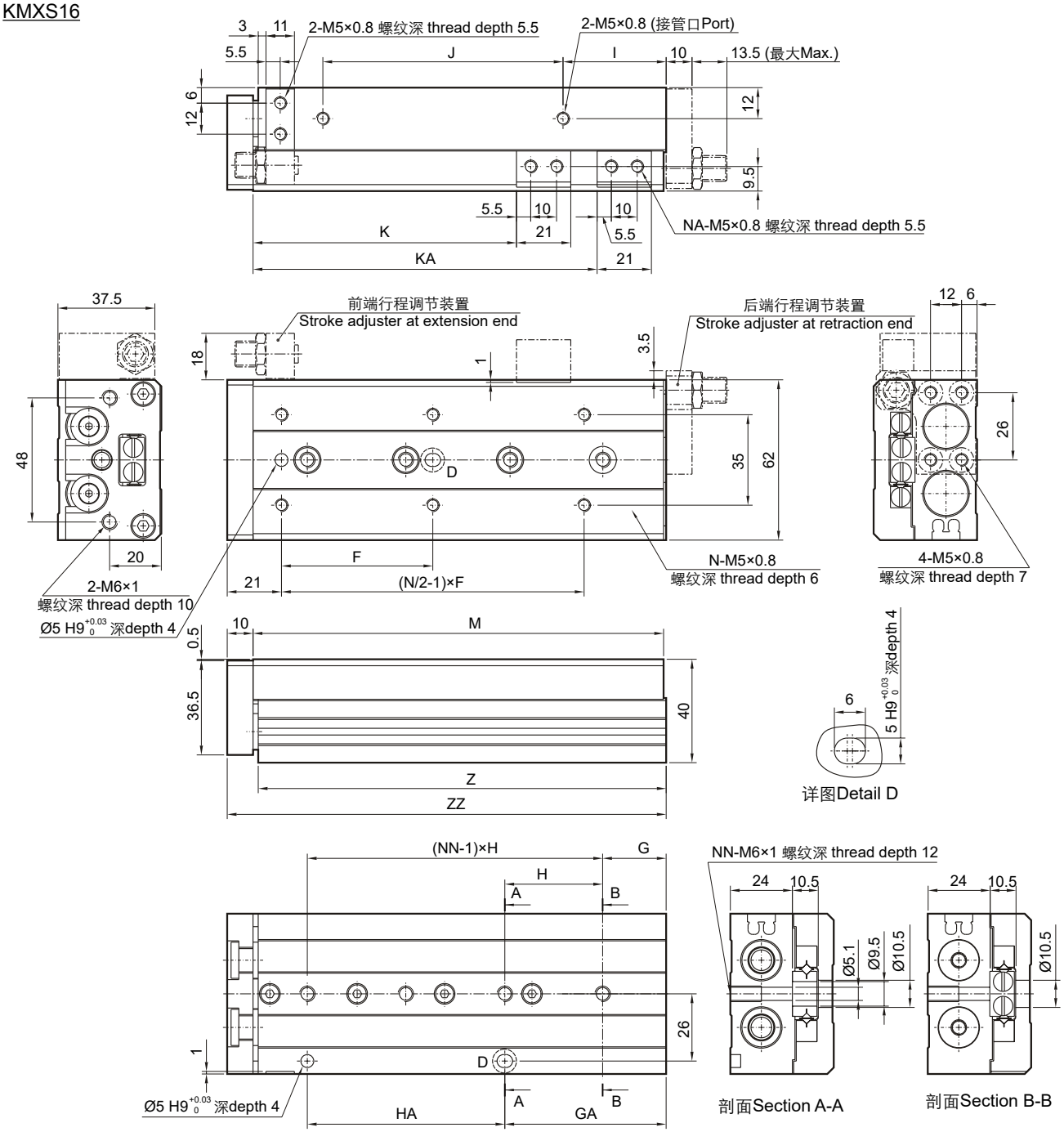

型号 Model	F	G	GA	H	HA	I	J	K	KA	M	N	NA	NN	Z	ZZ
KMXS16-10	35	16	16	40	40	10	40	29	-	76	4	2	2	75	87
KMXS16-20	35	16	16	40	40	10	40	39	-	76	4	2	2	75	87
KMXS16-30	35	16	16	40	40	10	40	49	-	76	4	2	2	75	87
KMXS16-40	40	16	16	50	50	10	50	59	-	86	4	2	2	85	97
KMXS16-50	30	21	51	30	30	15	60	69	-	101	6	2	3	100	112
KMXS16-75	55	26	61	35	70	40	85	94	125	151	6	4	4	150	162
KMXS16-100	65	39	109	35	70	55	118	119	173	199	6	4	5	198	210
KMXS16-125	70	19	159	35	70	68	155	144	223	249	8	4	7	248	260

滑台气缸(交叉滚柱导轨)
Air Slide Table (Cross Roller Guide)
Series KMXS

外形尺寸图 Dimensions (mm)

KMXS20

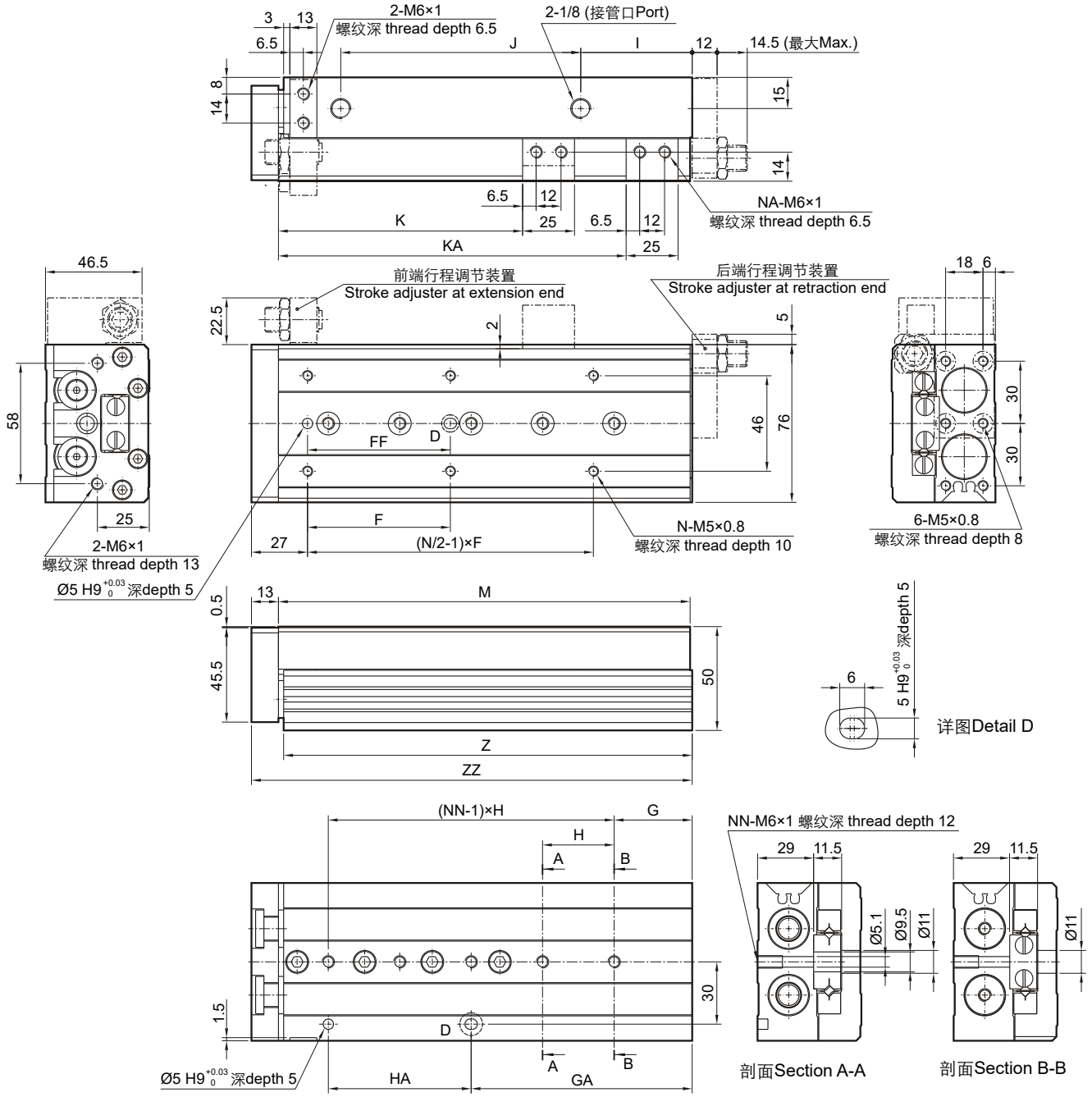

型号 Model	F	FF	G	GA	H	HA	I	J	K	KA	M	N	NA	NN	Z	ZZ
KMXS20-10	50	40	15	25	45	35	10	44	31	-	83	4	2	2	81.5	97
KMXS20-20	50	40	15	25	45	35	10	44	41	-	83	4	2	2	81.5	97
KMXS20-30	50	40	15	25	45	35	10	44	51	-	83	4	2	2	81.5	97
KMXS20-40	60	50	15	35	55	35	10	54	61	-	93	4	2	2	91.5	107
KMXS20-50	35	35	15	50	35	35	10	69	71	-	108	6	2	3	106.5	122
KMXS20-75	60	60	19	54	35	70	10	108	96	-	147	6	2	4	145.5	161
KMXS20-100	70	70	37	107	35	70	58	113	121	169	200	6	4	5	198.5	214
KMXS20-125	70	70	41	155	38	76	70	155	146	223	254	8	4	6	252.5	268
KMXS20-150	80	80	19	195	44	88	87	190	171	275	306	8	4	7	304.5	320

滑台气缸(交叉滚柱导轨)
Air Slide Table (Cross Roller Guide)
Series KMXS

外形尺寸图 Dimensions (mm)

KMXS25

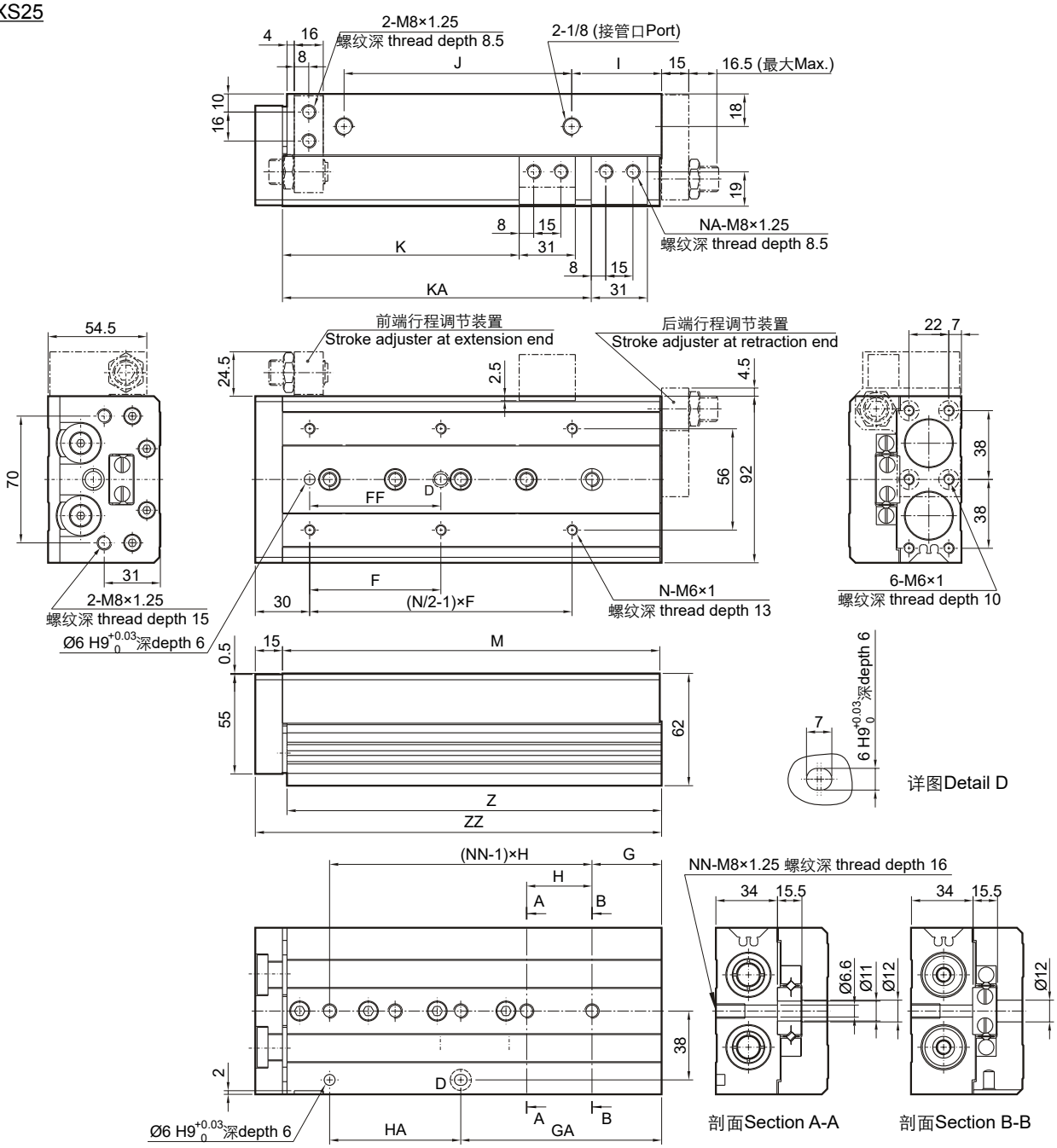

型号 Model	F	FF	G	GA	H	HA	I	J	K	KA	M	N	NA	NN	Z	ZZ
KMXS25-10	50	40	22	22	45	45	12	47	35	-	92	4	2	2	90.5	108
KMXS25-20	50	40	22	22	45	45	12	47	45	-	92	4	2	2	90.5	108
KMXS25-30	50	40	22	22	45	45	12	47	55	-	92	4	2	2	90.5	108
KMXS25-40	60	50	22	22	55	55	12	57	65	-	102	4	2	2	100.5	118
KMXS25-50	35	35	20	55	35	35	12	70	75	-	115	6	2	3	113.5	131
KMXS25-75	60	60	26	61	35	70	33	90	100	-	156	6	2	4	154.5	172
KMXS25-100	70	70	32	102	35	70	50	114	125	162	197	6	4	5	195.5	213
KMXS25-125	75	75	40	154	38	76	67	155	150	218	255	8	4	6	253.5	271
KMXS25-150	80	80	30	190	40	80	82	180	175	258	295	8	4	7	293.5	311

油压缓冲器外形尺寸图 Dimensions (mm)

KMXS8

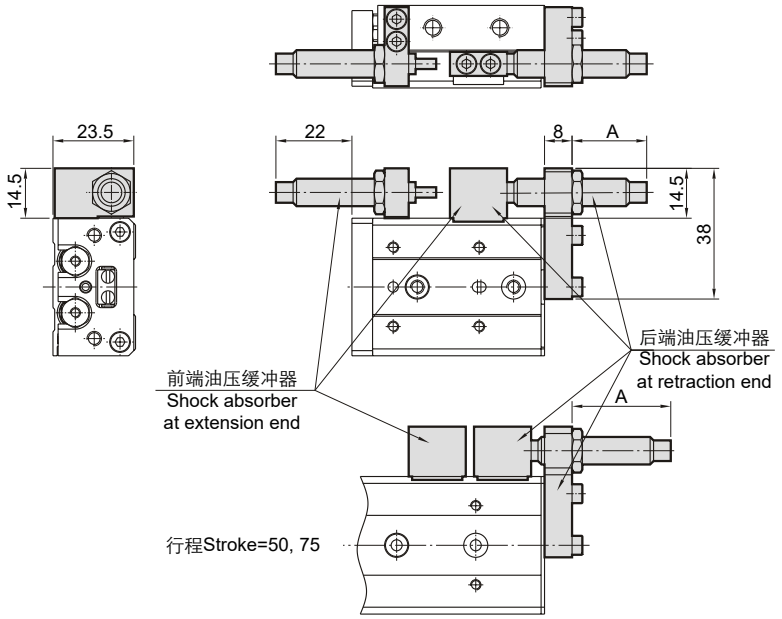

行程 Stroke	行程调整范围 Stroke adjustable range		A（后端固定）(Retracted side mounting)
	前端 Extending	后端 Retracting	
10	最大 Max. 22	5	22
20		15	27
30		15	26
40		5	18
50		20	29
75		20	29

KMXS12

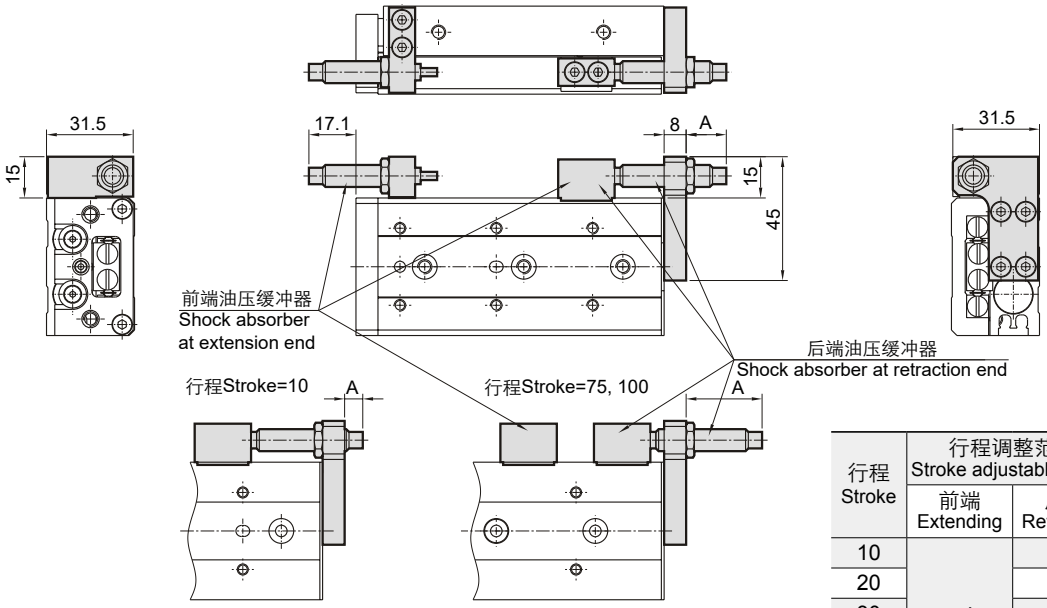

行程 Stroke	行程调整范围 Stroke adjustable range		A（后端固定）(Retracted side mounting)
	前端 Extending	后端 Retracting	
10	最大 Max. 21.2	1.6	6.6
20		8.6	16.6
30		18.6	26.6
40		16.6	24.6
50		6.6	14.6
75		19.6	27.6
100		19.6	27.6

油压缓冲器外形尺寸图 Dimensions (mm)

KMXS16

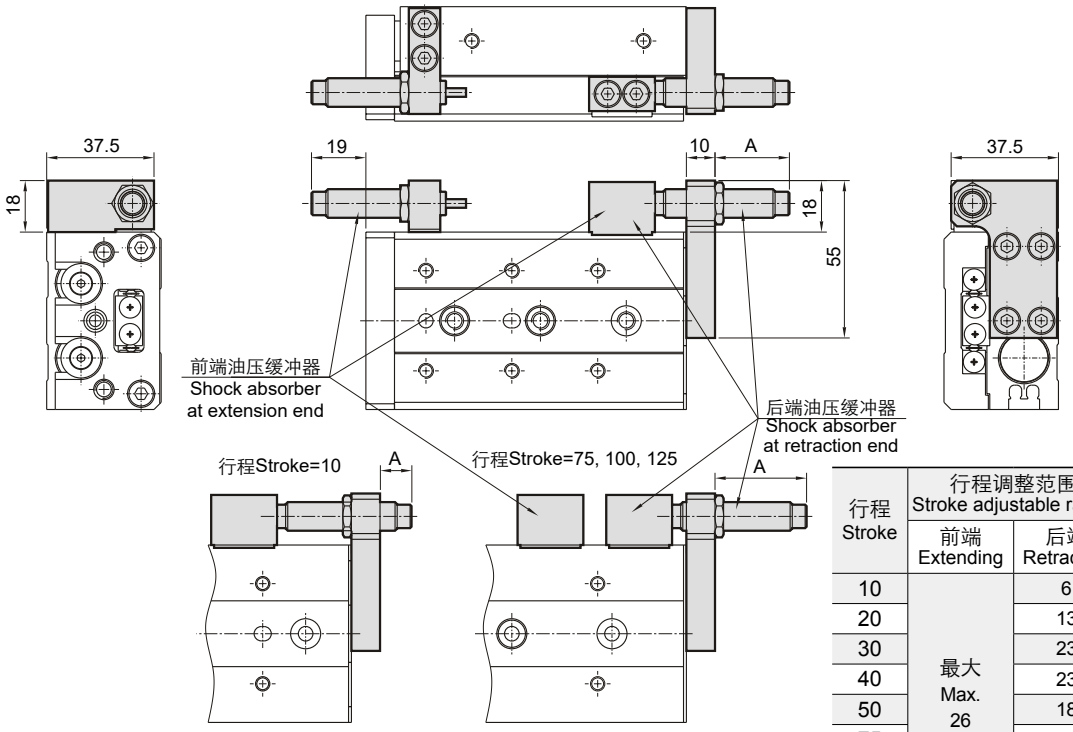

行程 Stroke	行程调整范围 Stroke adjustable range		A（后端固定）(Retracted side mounting)
	前端 Extending	后端 Retracting	
10	最大 Max. 26	6	11
20		13	21
30		23	31
40		23	31
50		18	26
75		24	32
100		24	32
125		24	32

KMXS20, KMXS25

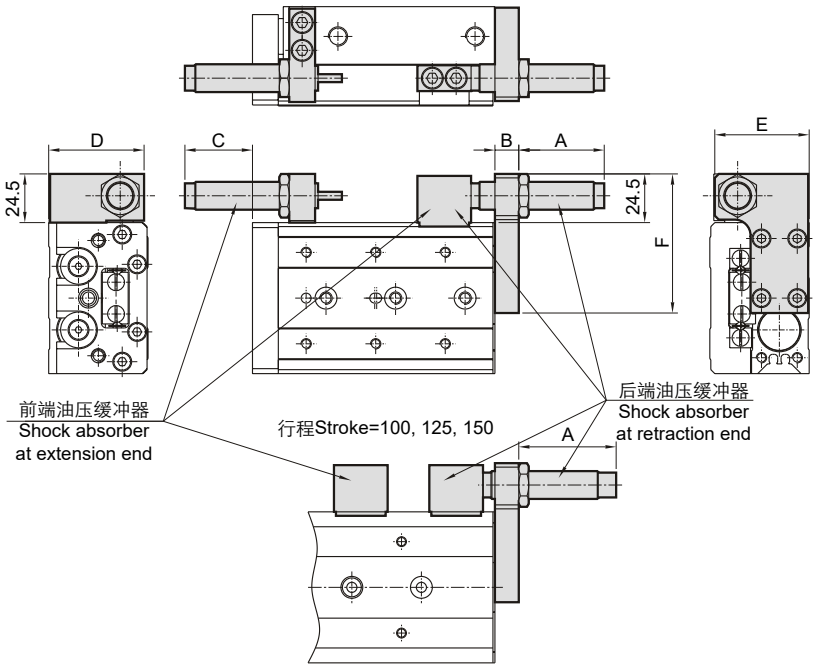

缸径 Bore size	B	C	D	E	F
20	12	34	48	47.5	70
25	15	28	54.5	54.5	80

行程 Stroke	行程调整范围 Stroke adjustable range				A（后端固定）(Retracted side mounting)	
	前端 Extending		后端 Retracting			
	KMXS20	KMXS25	KMXS20	KMXS25	KMXS20	KMXS25
10	最大 Max. 42.5	最大 Max. 39.5	10	10	27	25
20			20	20	37	35
30			30	30	47	45
40			37	35	47	45
50			33	33	43	43
75			15	17	29	27
100			35	38	49	48
125			35	36	49	46
150			35	36	49	46

ARK

滑台气缸(循环直线导轨)
Air Slide Table (Recirculating Linear Guide)
Series KMXQ (Ø6~Ø25)

规格 Specifications

缸径 Bore size (mm)	6	8	12	16	20	25
接管口径 Port size Rc(PT)	M5x0.8				1/8	
使用流体 Fluid	过滤压缩空气 Filtered compressed air					
动作形式 Action	双动 Double acting					
使用压力范围 Operating pressure range (MPa)	0.15~0.7					
环境及流体温度 Ambient and fluid temperature	-5~60℃ (未冻结 No freezing)					
活塞速度 Piston speed	50~500 mm/s					
缓冲 Cushion	橡胶缓冲 (标准) Rubber bumper (Standard) 油压缓冲器 (可选) Shock absorber (Option)					
* 润滑 Lubrication	不需要 Not required					

* 如需要润滑请使用透平 1 号油 ISOVG32。Please use Turbine oil 1st Grade ISOVG32 if necessary.

行程 / 磁性开关 Stroke/ Auto switch

缸径 Bore size (mm)	标准行程 Standard stroke (mm)	磁性开关 / 轨道安装 Auto switch/ rail mounting
6	10, 20, 30, 40, 50	D-M9BK
8	10, 20, 30, 40, 50, 75	
12	10, 20, 30, 40, 50, 75, 100	
16	10, 20, 30, 40, 50, 75, 100, 125	
20, 25	10, 20, 30, 40, 50, 75, 100, 125, 150	

型号表示方法 How to Order

KMXQ [12] - [50] [ ]

缸径 Bore size (mm)

行程 Stroke (mm)

行程调整装置
Stroke adjuster

-	无 None
A	两端调程 Adjuster at both end
AS	前端调程 Adjuster at extension end
AT	后端调程 Adjuster at retraction end
*B	两端油压缓冲器 Shock absorber at both end
*BS	前端油压缓冲器 Shock absorber at extension end
*BT	后端油压缓冲器 Shock absorber at retraction end

*KMXQ6 无油压缓冲。Shock absorber is not available for KMXQ6.

滑台气缸(循环直线导轨)
Air Slide Table (Recirculating Linear Guide)
Series KMXQ

外形尺寸图 Dimensions (mm)

KMXQ6

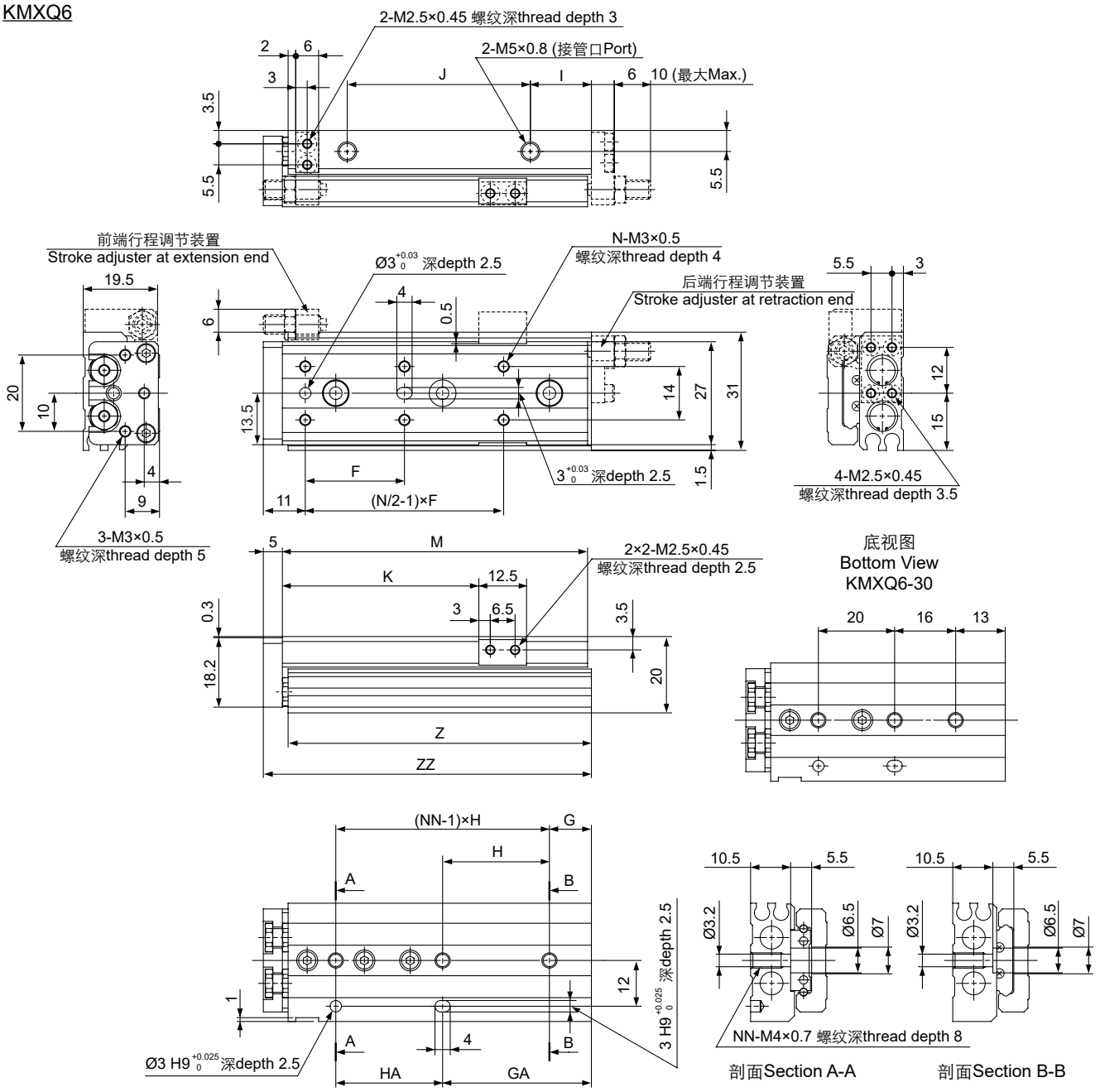

型号 Model	F	G	GA	H	HA	I	J	K	M	N	NN	Z	ZZ
KMXQ6-10	22	6	13	23	16	9	17	21.5	42	4	2	41.5	48
KMXQ6-20	25	13	13	26	26	9	27	31.5	52	4	2	51.5	58
KMXQ6-30	21	-	29	-	20	9	37	41.5	62	6	3	61.5	68
KMXQ6-40	26	11	39	28	28	16	48	51.5	80	6	3	79.5	86
KMXQ6-50	27	21	49	28	28	9	65	61.5	90	6	3	89.5	96

滑台气缸(循环直线导轨)
Air Slide Table (Recirculating Linear Guide)
Series KMXQ

外形尺寸图 Dimensions (mm)

KMXQ8

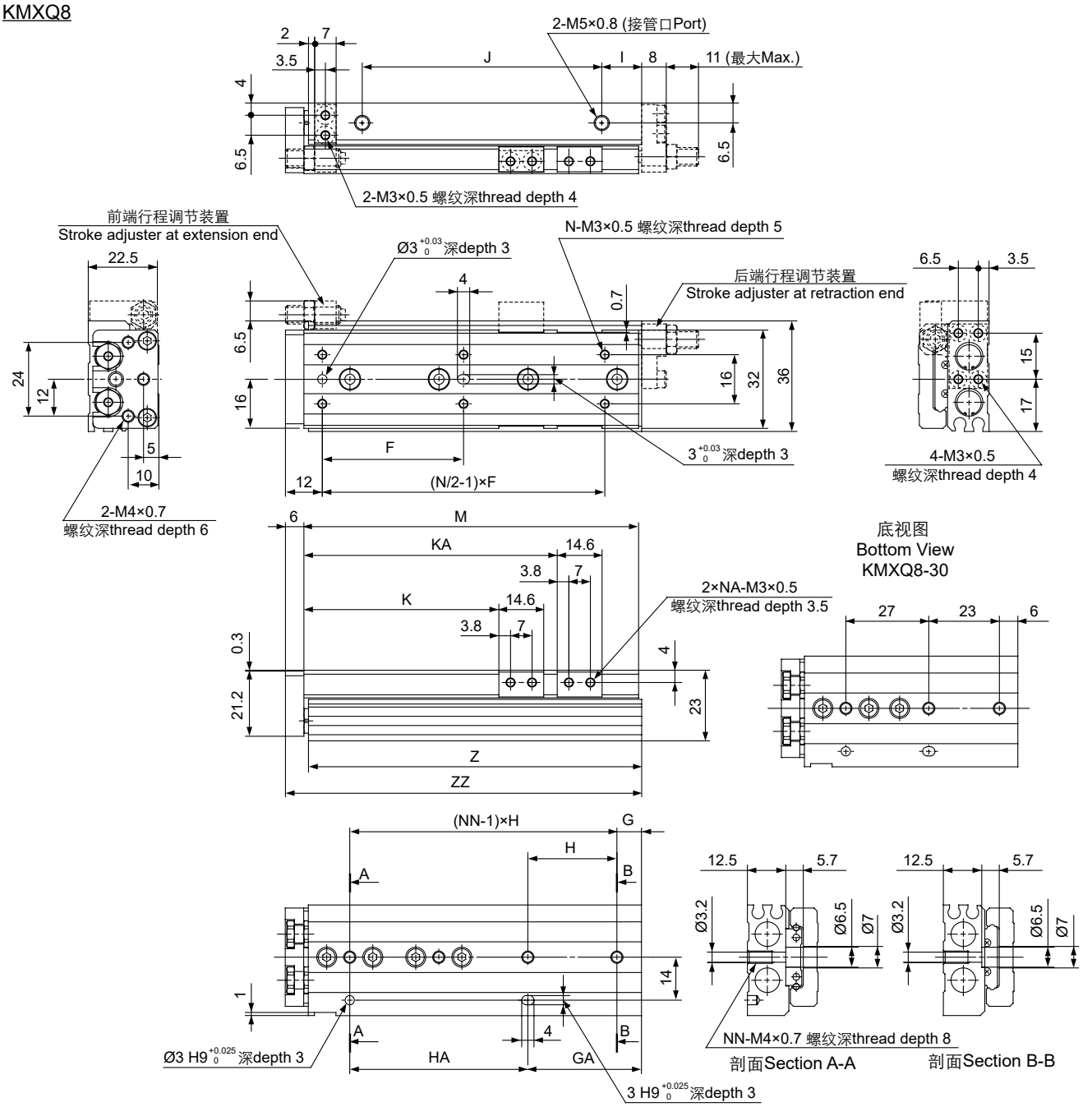

型号 Model	F	G	GA	H	HA	I	J	K	KA	M	N	NA	NN	Z	ZZ
KMXQ8-10	25	7	13	25	19	11	17	23.5	-	46	4	2	2	45.5	53
KMXQ8-20	25	14	14	28	28	10	28	33.5	-	56	4	2	2	55.5	63
KMXQ8-30	26	-	29	-	27	12	40	43.5	-	70	6	2	3	69.5	77
KMXQ8-40	32	8	39	31	31	14	52	53.5	-	84	6	2	3	83.5	91
KMXQ8-50	46	8	37	29	58	13	78	63.5	82.5	109	6	4	4	108.5	116
KMXQ8-75	50	31	61	30	60	12	105	88.5	112.5	135	6	4	4	134.5	142

滑台气缸(循环直线导轨)
Air Slide Table (Recirculating Linear Guide)
Series KMXQ

外形尺寸图 Dimensions (mm)

KMXQ12

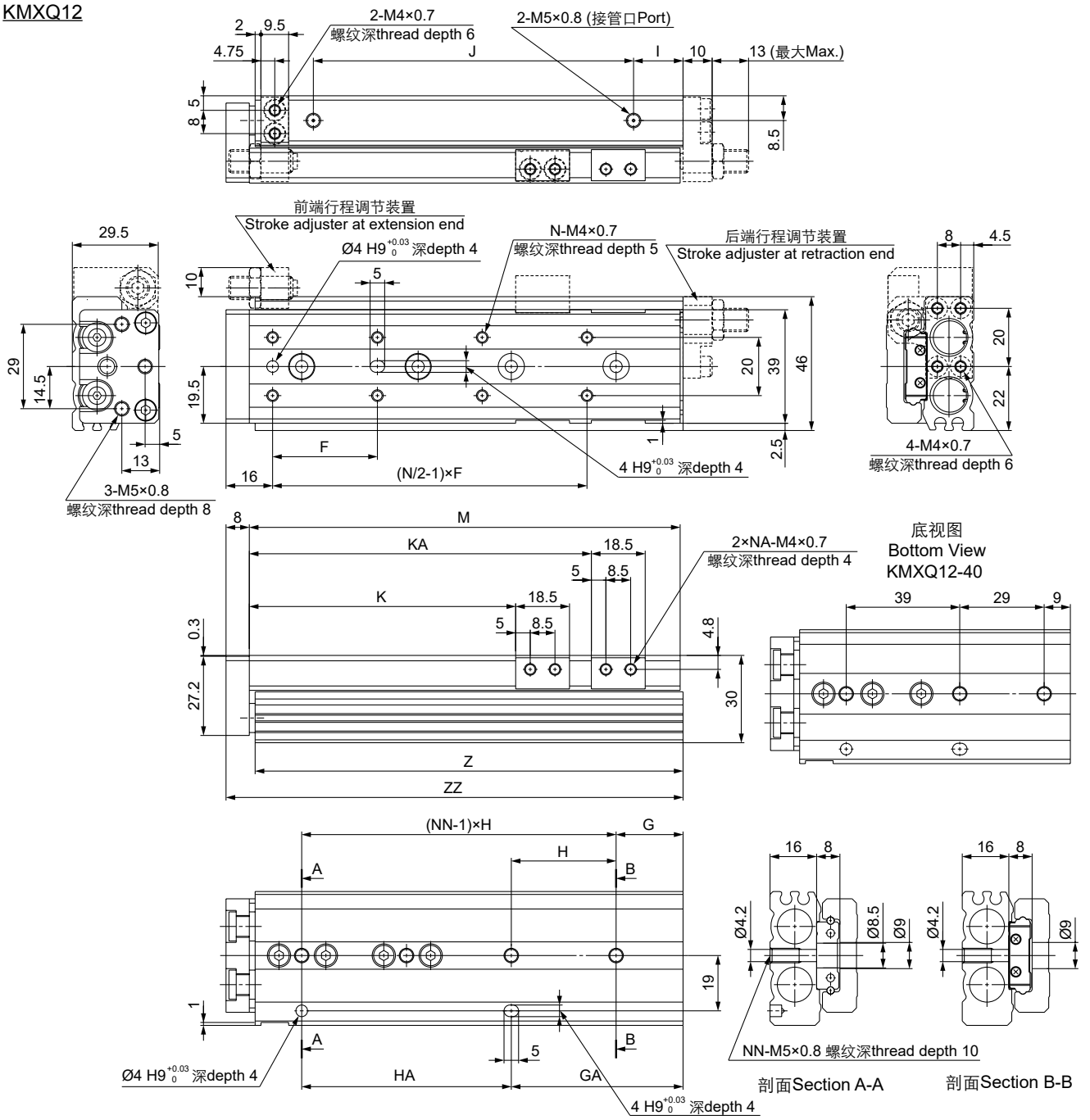

型号 Model	F	G	GA	H	HA	I	J	K	KA	M	N	NA	NN	Z	ZZ
KMXQ12-10	28	18	18	32	32	12	34	26.5	-	67	4	2	2	66	76
KMXQ12-20	28	18	18	32	32	12	34	36.5	-	67	4	2	2	66	76
KMXQ12-30	38	20	20	40	40	14	42	46.5	-	77	4	2	2	76	86
KMXQ12-40	34	-	38	-	39	15	58	56.5	-	94	6	2	3	93	103
KMXQ12-50	34	9	48	39	39	13	70	66.5	-	104	6	2	3	103	113
KMXQ12-75	36	23	59	36	72	17	110	91.5	117.5	148	8	4	4	147	157
KMXQ12-100	36	12	84	36	72	17	135	116.5	142.5	173	10	4	5	172	182

滑台气缸(循环直线导轨)
Air Slide Table (Recirculating Linear Guide)
Series KMXQ

外形尺寸图 Dimensions (mm)

KMXQ16

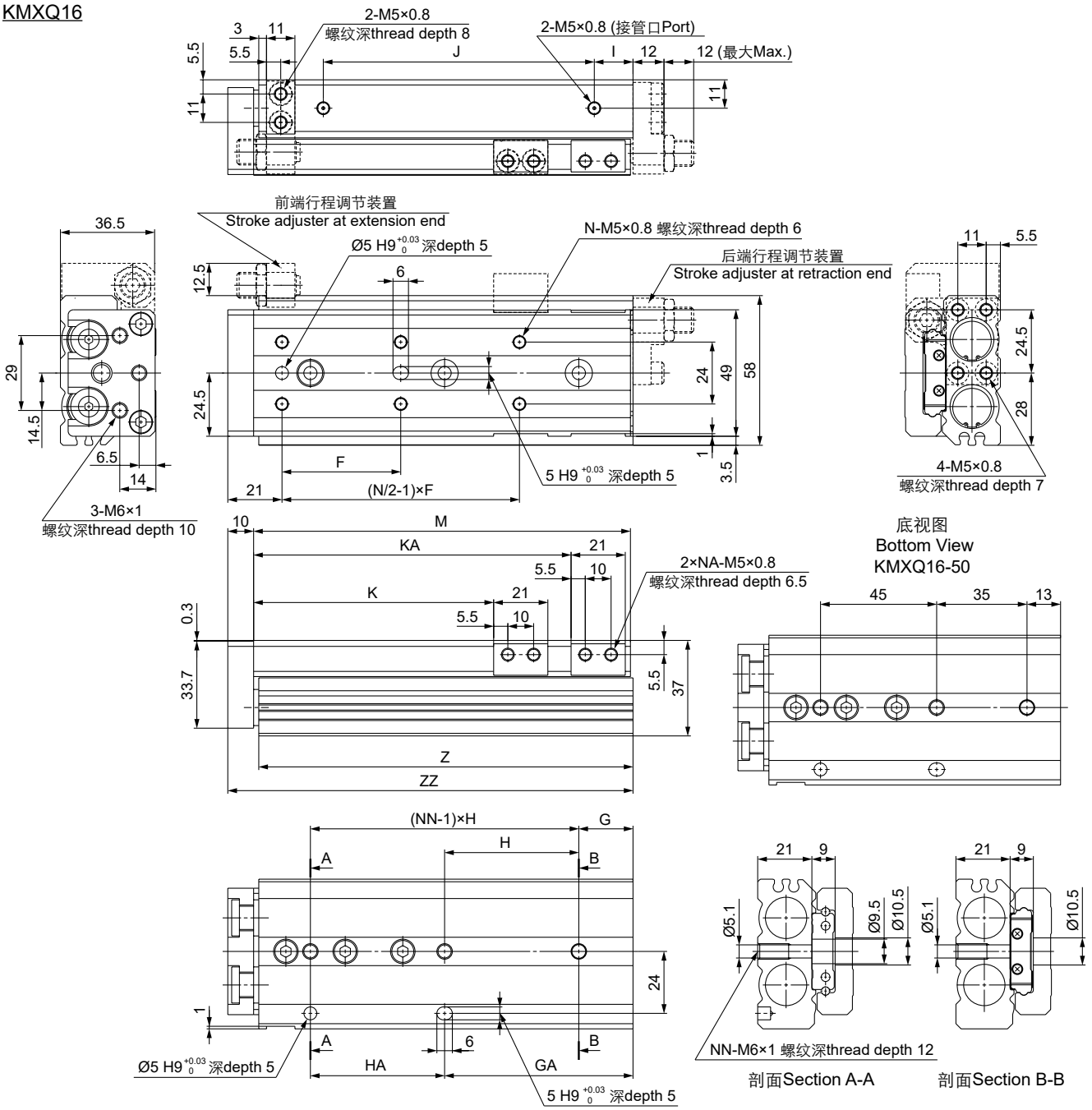

型号 Model	F	G	GA	H	HA	I	J	K	KA	M	N	NA	NN	Z	ZZ
KMXQ16-10	38	18	18	39	39	12	40	28	-	78	4	2	2	77	89
KMXQ16-20	38	18	18	39	39	12	40	38	-	78	4	2	2	77	89
KMXQ16-30	48	19	19	48	48	12	50	48	-	88	4	2	2	87	99
KMXQ16-40	58	19	19	58	58	12	60	58	-	98	4	2	2	97	109
KMXQ16-50	40	-	48	-	45	20	68	68	91	114	6	4	3	113	125
KMXQ16-75	46	21	73	52	52	15	105	93	123	146	6	4	3	145	157
KMXQ16-100	44	36	80	44	88	18	145	118	166	189	8	4	4	188	200
KMXQ16-125	44	17	105	44	88	23	165	143	191	214	10	4	5	213	225

滑台气缸(循环直线导轨)
Air Slide Table (Recirculating Linear Guide)
Series KMXQ

外形尺寸图 Dimensions (mm)

KMXQ20

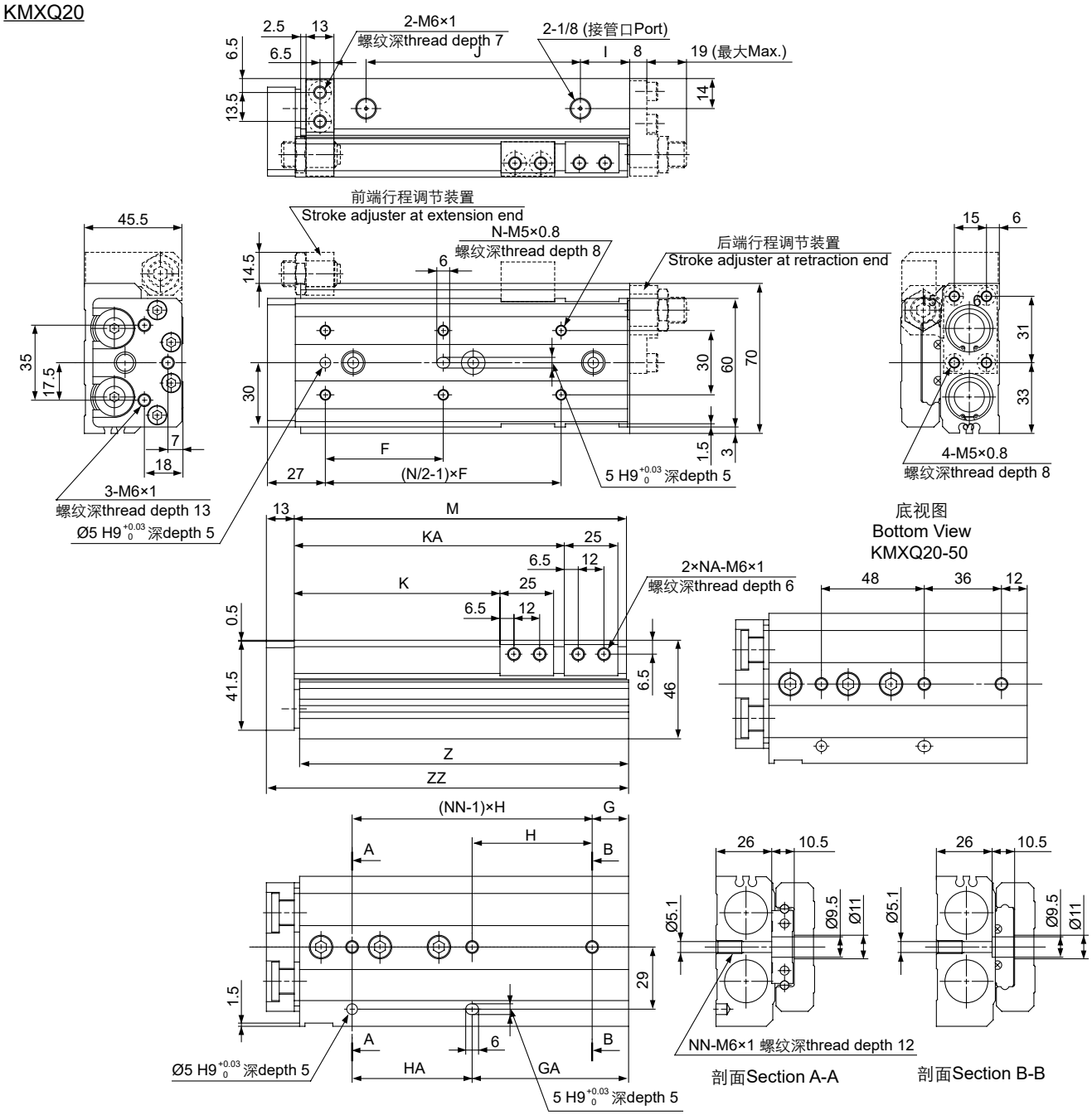

型号 Model	F	G	GA	H	HA	I	J	K	KA	M	N	NA	NN	Z	ZZ
KMXQ20-10	45	22	18	46	50	16	46	31	-	94	4	2	2	92.5	108
KMXQ20-20	40	22	18	46	50	16	46	41	-	94	4	2	2	92.5	108
KMXQ20-30	48	22	18	46	50	16	46	51	-	94	4	2	2	92.5	108
KMXQ20-40	58	22	22	56	56	16	56	61	-	104	4	2	2	102.5	118
KMXQ20-50	42	-	48	-	48	18	72	71	-	122	6	2	3	120.5	136
KMXQ20-75	55	17	73	56	56	23	100	96	126	155	6	4	3	153.5	169
KMXQ20-100	50	18	74	56	112	25	155	121	183	212	8	4	4	210.5	226
KMXQ20-125	55	37	96	59	118	18	190	146	211	240	8	4	4	238.5	254
KMXQ20-150	62	56	118	62	124	21	215	171	239	268	8	4	4	266.5	282

滑台气缸(循环直线导轨)
Air Slide Table (Recirculating Linear Guide)
Series KMXQ

外形尺寸图 Dimensions (mm)

KMXQ25

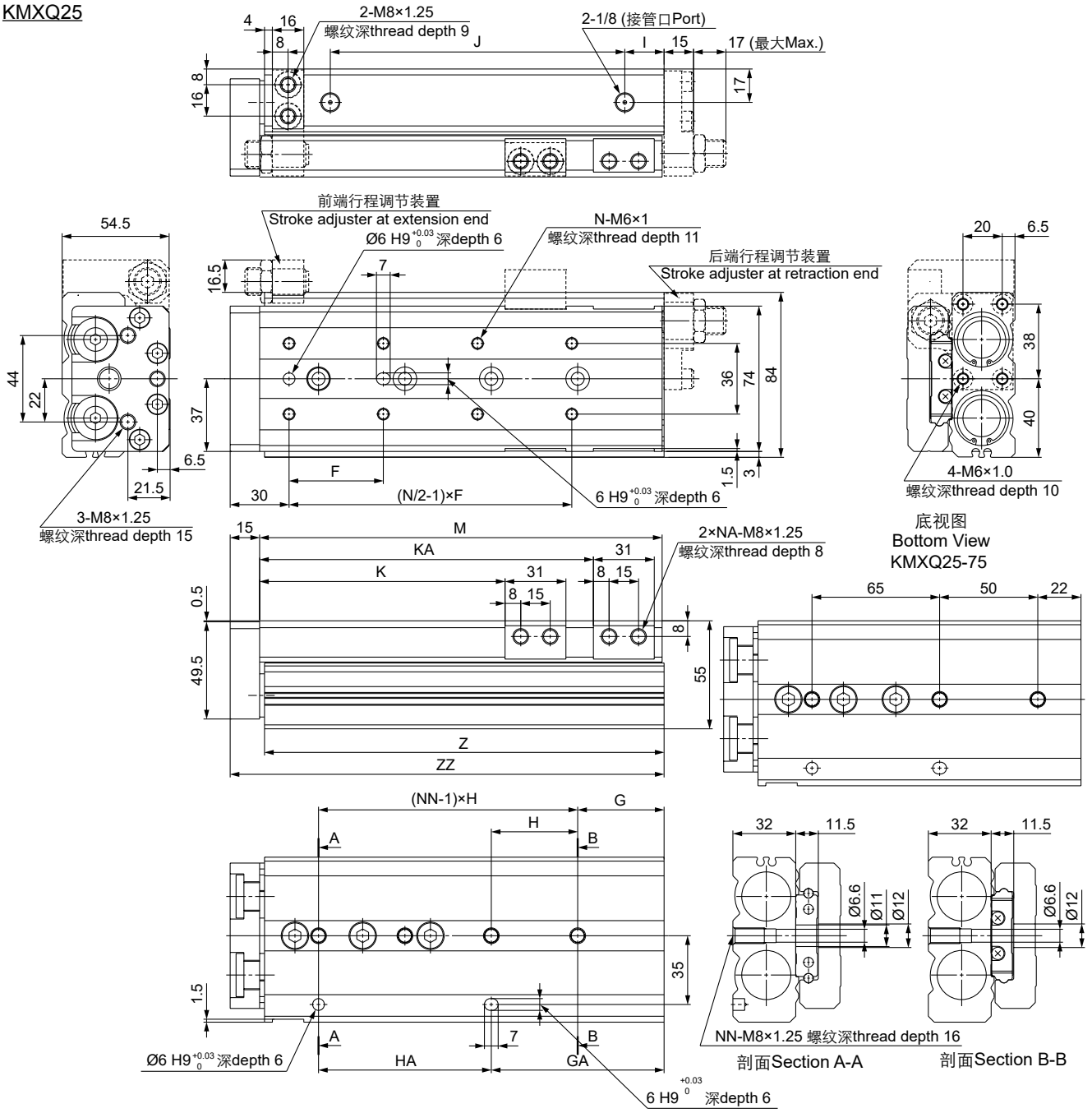

型号 Model	F	G	GA	H	HA	I	J	K	KA	M	N	NA	NN	Z	ZZ
KMXQ25-10	55	23	23	55	55	16	56	35	-	107	4	2	2	105.5	123
KMXQ25-20	46	23	23	55	55	16	56	45	-	107	4	2	2	105.5	123
KMXQ25-30	55	23	23	55	55	16	56	55	-	107	4	2	2	105.5	123
KMXQ25-40	65	23	23	65	65	16	66	65	-	117	4	2	2	115.5	133
KMXQ25-50	75	32	32	80	80	16	90	75	-	141	4	2	2	139.5	157
KMXQ25-75	60	-	72	-	65	31	100	100	-	166	6	2	3	164.5	182
KMXQ25-100	48	44	88	44	88	20	150	125	170	205	8	4	4	203.5	221
KMXQ25-125	60	31	97	66	132	18	205	150	223	258	8	4	4	256.5	274
KMXQ25-150	65	56	122	66	132	18	230	175	248	283	8	4	4	281.5	299

ARK

滑台气缸(小型)
Air Slide Table (Compact)
Series KMXH (Ø6~Ø20)

规格 Specifications

缸径 Bore size (mm)	6	10	16	20
接管口径 Port size Rc(PT)	M5x0.8			
使用流体 Fluid	过滤压缩空气 Filtered compressed air			
动作形式 Action	双动 Double acting			
使用压力范围 Operating pressure range (MPa)	0.15~0.7	0.06~0.7		0.05~0.7
环境及流体温度 Ambient and fluid temperature	-5~60℃ (未冻结 No freezing)			
活塞速度 Piston speed	50~500 mm/s			
缓冲 Cushion	橡胶缓冲 Rubber bumper			
* 润滑 Lubrication	不需要 Not required			

* 如需要润滑请使用透平 1 号油 ISOVG32。Please use Turbine oil 1st Grade ISOVG32 if necessary.

行程 / 磁性开关 Stroke/ Auto switch

缸径 Bore size (mm)	标准行程 Standard stroke (mm)	磁性开关 / 轨道安装 Auto switch/ rail mounting
6,10, 16, 20	5, 10, 15, 20, 25, 30, 40, 50, 60	D-M9BK

型号表示方法 How to Order

KMXH **10** - **30**

缸径 Bore size (mm)

行程 Stroke (mm)

3

滑台气缸(小型)
Air Slide Table (Compact)
Series KMXH

外形尺寸图 Dimensions (mm)

KMXH6

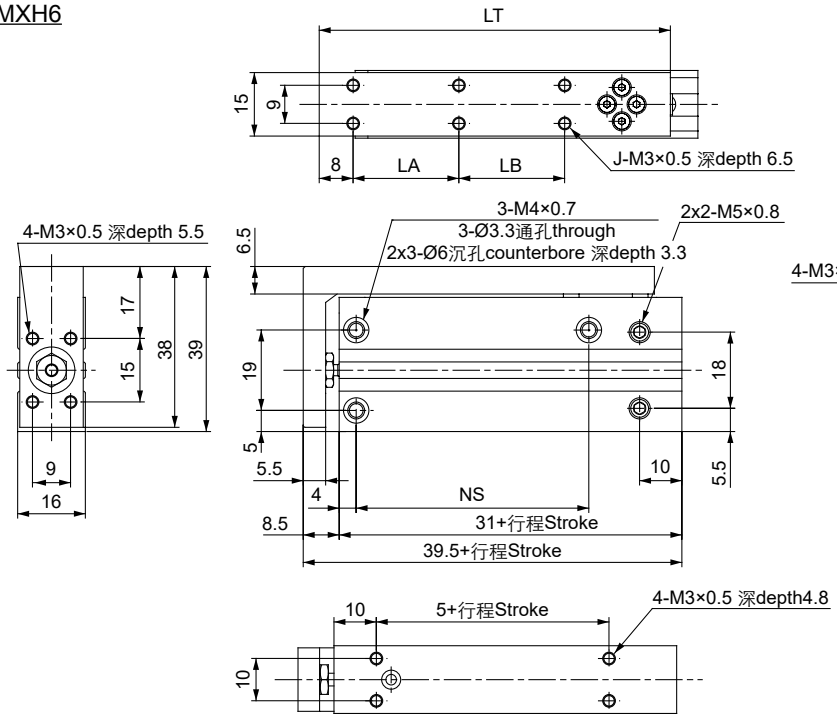

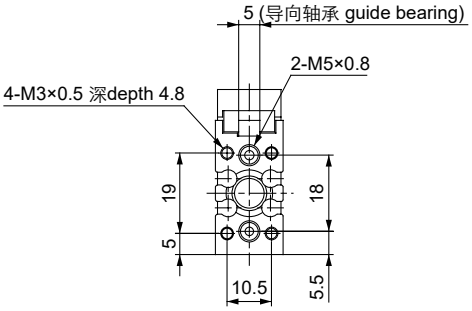

型号 Model	J	LA	LB	LT	NS
KMXH6-5	4	10	-	42	14
KMXH6-10	4	10	-	42	14
KMXH6-15	4	20	-	52	24
KMXH6-20	4	20	-	52	24
KMXH6-25	4	30	-	62	30
KMXH6-30	4	30	-	62	30
KMXH6-40	6	20	20	72	45
KMXH6-50	6	25	25	82	55
KMXH6-60	6	30	30	92	60

KMXH10

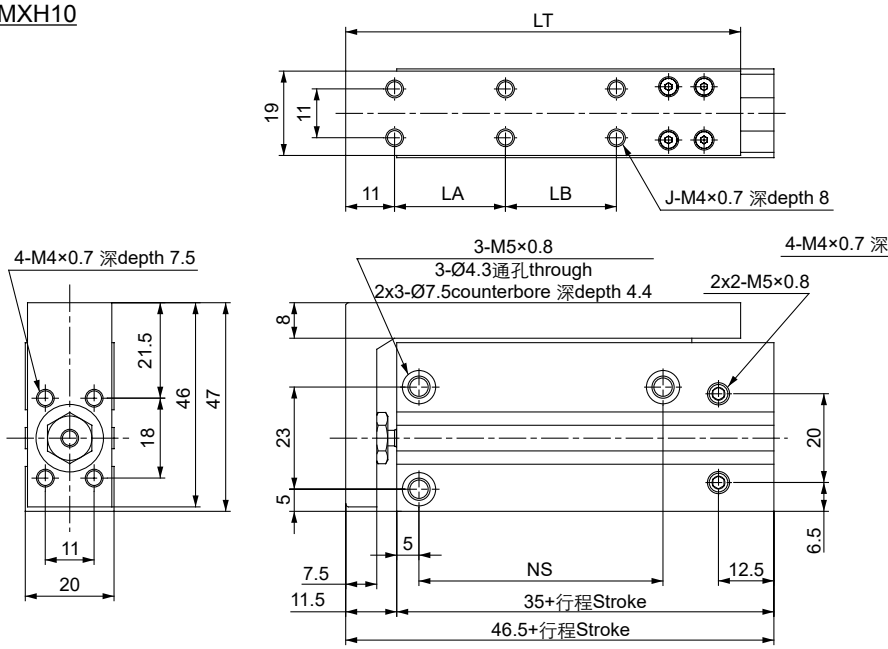

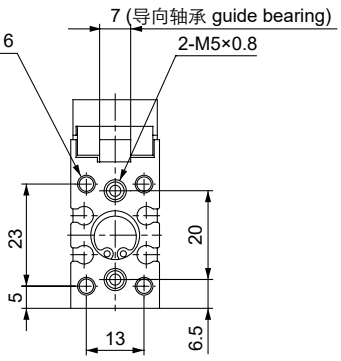

型号 Model	J	LA	LB	LT	NS
KMXH10-5	4	10	-	49	14
KMXH10-10	4	10	-	49	14
KMXH10-15	4	20	-	59	24
KMXH10-20	4	20	-	59	24
KMXH10-25	4	30	-	69	30
KMXH10-30	4	30	-	69	30
KMXH10-40	6	20	20	79	45
KMXH10-50	6	25	25	89	55
KMXH10-60	6	30	30	99	60

滑台气缸(小型)
Air Slide Table (Compact)
Series KMXH

外形尺寸图 Dimensions (mm)

KMXH16

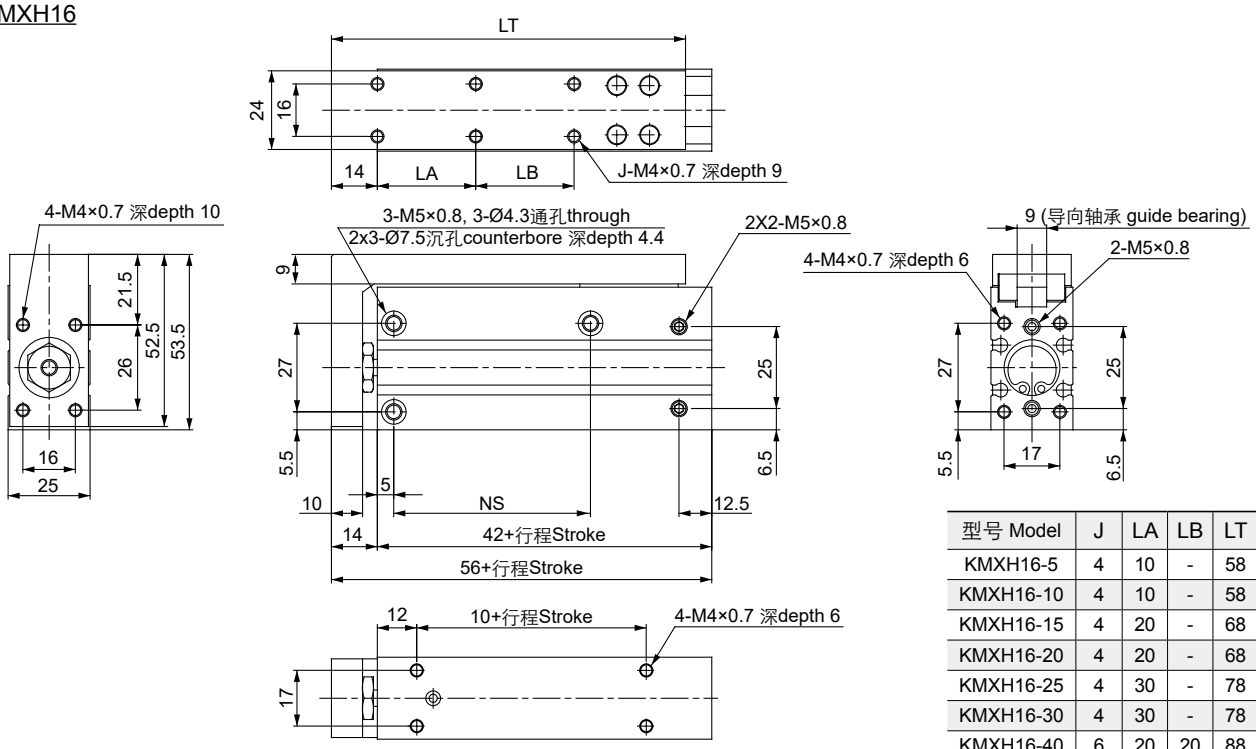

型号 Model	J	LA	LB	LT	NS
KMXH16-5	4	10	-	58	20
KMXH16-10	4	10	-	58	20
KMXH16-15	4	20	-	68	30
KMXH16-20	4	20	-	68	30
KMXH16-25	4	30	-	78	40
KMXH16-30	4	30	-	78	40
KMXH16-40	6	20	20	88	50
KMXH16-50	6	25	25	98	60
KMXH16-60	6	30	30	108	60

KMXH20

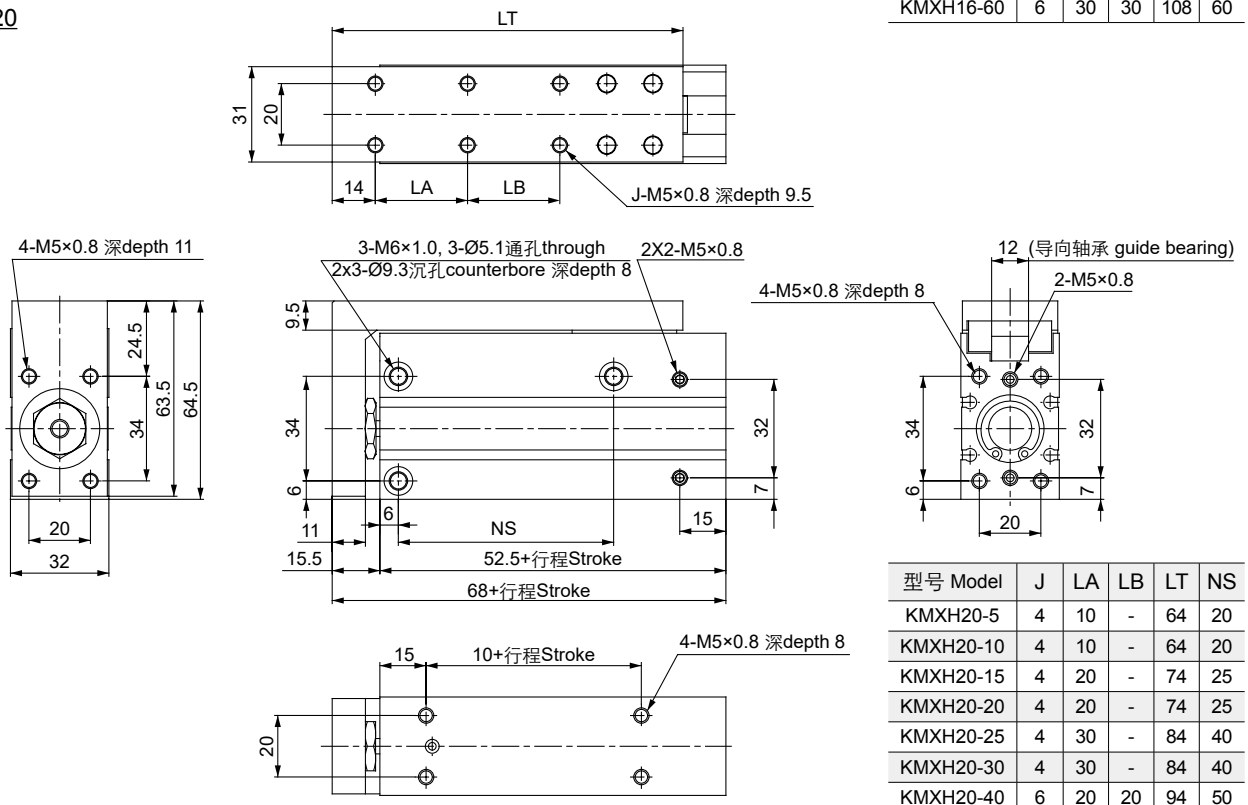

型号 Model	J	LA	LB	LT	NS
KMXH20-5	4	10	-	64	20
KMXH20-10	4	10	-	64	20
KMXH20-15	4	20	-	74	25
KMXH20-20	4	20	-	74	25
KMXH20-25	4	30	-	84	40
KMXH20-30	4	30	-	84	40
KMXH20-40	6	20	20	94	50
KMXH20-50	6	25	25	104	70
KMXH20-60	6	30	30	114	70

ARK

旋转气缸(齿轮齿条式)
Rotary Table (Rack & Pinion Style)
Series KMSQB (10~200)

规格 Specifications

尺寸 Size (mm)		10	20	30	50	70	100	200
接管口径 Port size Rc(PT)		M5x0.8		1/8				
活塞直径 Piston diameter (mm)		Ø15	Ø18	Ø21	Ø25	Ø28	Ø32	Ø40
使用流体 Fluid		过滤压缩空气 Filtered compressed air						
使用压力范围 Operating pressure range (MPa)	调整螺丝 Adjusting bolt	0.1~1.0						
	油压缓冲器 Shock absorber	0.1~0.6						
环境及流体温度 Ambient and fluid temperature		0~60℃ (未凝结 No condensation)						
旋转角度范围 Rotation angle range		0° ~190°						
缓冲 Cushion	调整螺丝 Adjusting bolt	橡胶缓冲 Rubber bumper						
	油压缓冲器 Shock absorber	油压缓冲器 Shock absorber						
* 润滑 Lubrication		不需要 Not required						
磁性开关 Auto switch		D-M9BK						

* 如需要润滑请使用透平 1 号油 ISOVG32。Please use Turbine oil 1st Grade ISOVG32 if necessary.

有效扭矩 Effective Output

尺寸Size: 10, 20, 30

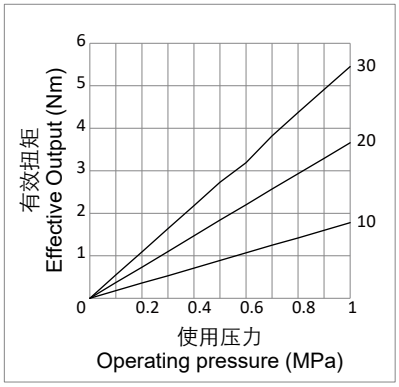

尺寸Size: 50, 70

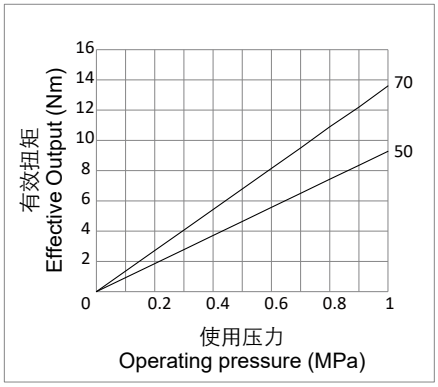

尺寸Size: 100, 200

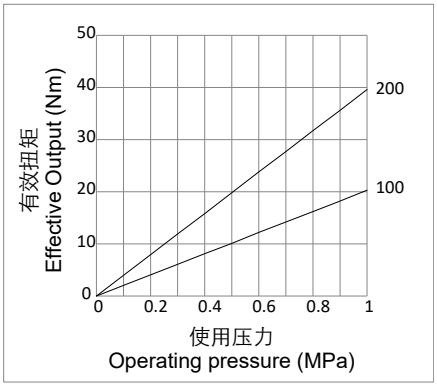

型号表示方法 How to Order

KMSQB **2 0** **A**

尺寸 Size

类型 Type

A	带调整螺丝 With adjusting bolt
R	带油压缓冲器 With shock absorber

3

旋转气缸(齿轮齿条式)
Rotary Table (Rack & Pinion Style)
Series KMSQB

外形尺寸图 Dimensions (mm)

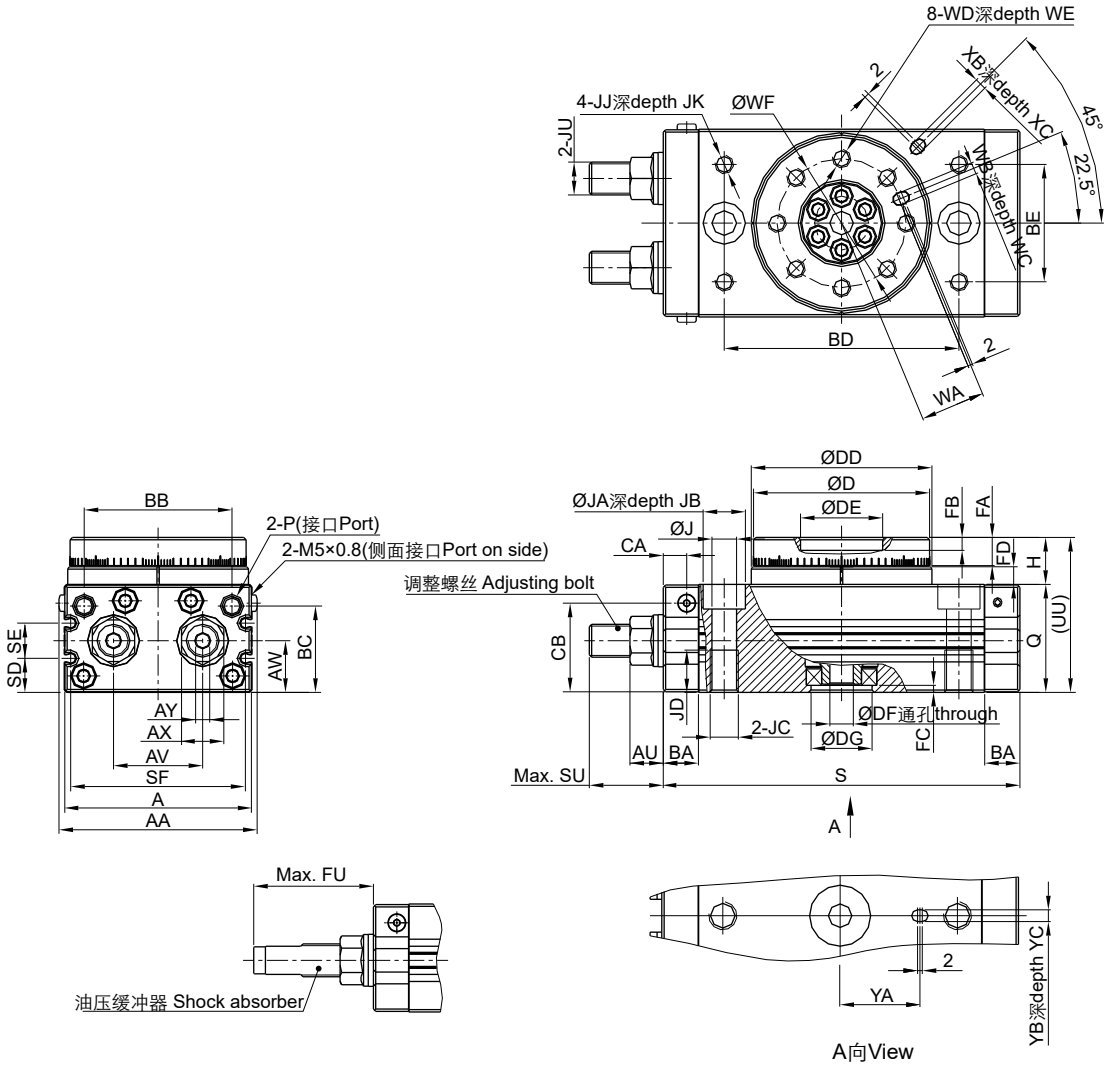

尺寸 Size	A	AA	AU	AV	AW	AX	AY	BA	BB	BC	BD	BE	CA	CB	D	DD	DE	DF	DG	FA	FB	FC	FD	FU	H	J	JA	JB
10	50	55.4	8.6	20	15.5	12	4	9.5	34.5	27.8	60	27	4.5	28.5	45h9	46h9	20H9	5	15H9	8	4	3	4.5	31.5	13	6.8	11	6.5
20	65	70.8	10.6	27.5	16	14	5	12	46	30	76	34	6	30.5	60h9	61h9	28H9	9	17H9	10	6	2.5	6.5	34.7	17	8.6	14	8.5
30	70	75.4	10.6	29	18.5	14	5	12	50	32	84	37	6.5	33.5	65h9	67h9	32H9	9	22H9	10	4.5	3	6.5	34.7	17	8.6	14	8.5
50	80	85.4	14	38	22	19	6	15.5	63	37.5	100	50	10	37.5	75h9	77h9	35H9	10	26H9	12	5	3	7.5	51.7	20	10.5	18	10.5
70	84	90	8	42	25.5	27	8	17	75	44.5	110	57	9	25.5	88h9	90h9	46H9	16	22H9	12.5	5	3.5	9	55.4	22	10.4	17.5	10.5
100	95	101	8	50	29.5	27	8	17	85	50.5	130	66	9	29.5	98h9	100h9	56H9	19	24H9	14.5	6	3.5	12	55.5	27	10.4	17.5	10.5
200	113	119	8	60	36.5	36	10	24	103	65.5	150	80	9	36.5	116h9	118h9	64H9	24	32H9	16.5	9	3.5	15	79.5	32	14.2	20	12.5

尺寸 Size	JC	JD	JJ	JK	JU	P	Q	S	SD	SE	SF	SU	UU	WA	WB	WC	WD	WE	WF	XA	XB	XC	YA	YB	YC
10	M8x1.25	12	M5x0.8	8	M8x1.0	M5x0.8	34	92	9	13	45	17.7	47	15	3H9	3.5	M5x0.8	8	32	27	3H9	3.5	19	3H9	3.5
20	M10x1.5	15	M6x1.0	8	M10x1.0	M5x0.8	37	117	10	12	60	25	54	20.5	4H9	4.5	M6x1.0	10	43	36	4H9	4.5	24	4H9	4.5
30	M10x1.5	15	M6x1.0	8	M10x1.0	1/8	40	127	11.5	14	65	25	57	23	4H9	4.5	M6x1.0	10	48	39	4H9	4.5	28	4H9	4.5
50	M12x1.75	18	M8x1.25	8	M14x1.5	1/8	46	152	14.5	15	75	31.4	66	26.5	5H9	5.5	M8x1.25	12	55	45	5H9	5.5	33	5H9	5.5
70	M12x1.75	18	M8x1.25	10	M20x1.5	1/8	53	170	18	15	79	34.2	75	32.5	5H9	5.5	M8x1.25	12.5	67	54	5H9	3.5	39	5H9	3.5
100	M12x1.75	18	M8x1.25	10	M20x1.5	1/8	59	189	22	15	90	34.3	86	37.5	6H9	6.5	M10x1.25	14.5	77	59	6H9	4.5	49	6H9	4.5
200	M16x2.0	25	M12x1.75	13	M27x1.5	1/8	74	240	29	15	108	40.2	106	44	8H9	8.5	M12x1.75	16.5	90	69	8H9	4.5	54	8H9	6.5

ARK 叶片式摆动气缸
Vane Type Rotary Actuator
Series KCRB2 (10~40)

规格 Specifications

尺寸 Size (mm)			10	15	20	30	40
接管口径 Port size Rc(PT)			M3x0.5		M5x0.8		
接管位置 Port location			侧面或轴向 Side ported or Axial ported				
使用流体 Fluid			过滤压缩空气 Filtered compressed air				
摆动角度 Rotating angle	单叶片式 Single vane type		90°, 180°, 270°				
	双叶片式 Double vane type		90°, 100°				
保证耐压力 Proof pressure (MPa)			1.05			1.5	
使用压力范围 Operating pressure range (MPa)			0.2~0.7	0.15~0.7		0.15~1.0	
环境及流体温度 Ambient and fluid temperature			5~60℃				
*1) 摆动时间调整范围 Rotation time adjustment range (s/90°)			0.03~0.3			0.04~0.3	0.07~0.5
允许动能 Allowable kinetic energy (J)	*2) 单叶片式 Single vane type		0.00015	0.001	0.003	0.02	0.04
				0.00025	0.0004	0.015	0.03
	双叶片式 Double vane type		0.0003	0.0012	0.0033	0.02	0.04
轴负载 Shaft load (N)	允许径向负载 Allowable radial load		15	15	25	30	60
	允许轴向负载 Allowable thrust load		10	10	20	25	40
角度可调整范围 Angle adjustable range	单叶片式 Single vane type	90°	0~85°				
		180°	0~175°				
		270°	0~230°	0~240°			0~230°
	双叶片式 Double vane type	90°	0~85°				
		100°	0~90°				
磁性开关 Auto switch			D-M9BK, D-Z80VK				

*1) 确保在速度调整范围内使用，速度低于调整范围会产生爬行现象或不能动作。Make sure to operate within the speed regulation range. Speed slower than the adjustment range can cause the unit to stick or not operate.
2) 表中上段为使用橡胶垫缓冲 (摆动端) 的场合， 下段为不使用垫缓冲的场合。The upper numbers in this section in the table are the value when the rubber bumper is used (at the end of the rotation), and the lower numbers are the value when the rubber bumper is not used.

3

型号表示方法 How to Order

KC [D] RB2 [B] [S] [20] - [180] [S] [E] Z

磁环 Magnet

-	无 None
D	内置磁环 Built-in magnet

安装形式 Mounting

B	基本型 Basic type
F	法兰型 Flange type (Ø10~Ø30)

尺寸 Size

轴形式 Shaft type

Symbol	轴形式 Shaft type	轴端形状 Shaft end shape	
		长轴 Long shaft	短轴 Short shaft
S	单轴 Single shaft	*1) 一面铣平 Single flat	-
*3) W	双轴 Double shaft	*1) 一面铣平 Single flat	一面铣平 Single flat
*2) 3) J	双轴 Double shaft	圆轴 Round shaft	一面铣平 Single flat
*2) K	双轴 Double shaft	圆轴 Round shaft	圆轴 Round shaft
*2) T	单轴 Single shaft	圆轴 Round shaft	-
*2) Y	双轴 Double shaft	一面铣平 Single flat	长轴一面铣平 Long shaft with single flat

*1) 尺寸 40 为键形式。A key is used for size 40. *2) J, K, T, Y 为定制生产。J, K, T, and Y are made to order.
*3) 带磁环的类型只适用 W, J 形式。Only W and J are available for the type with built -in magnet.

叶片形式 Vane type

S	单叶片 Single vane
D	双叶片 Double vane

摆动角度 Rotating angle

单叶片型 Single vane type	90	90°
	180	180°
	270	270°
双叶片型 Double vane type	90	90°
	100	100°

接管位置 Port location

-	侧面接管 Side ported
E	轴向接管 (仅无磁环类型) Axial ported (only the type without built-in magent

叶片式摆动气缸
Vane Type Rotary Actuator
Series KCRB2

有效扭矩 Effective Output

尺寸Size: 10

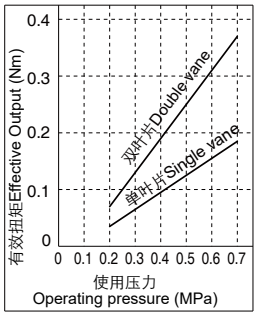

尺寸Size: 15

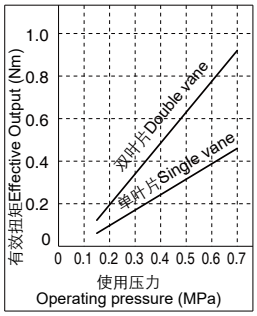

尺寸Size: 20

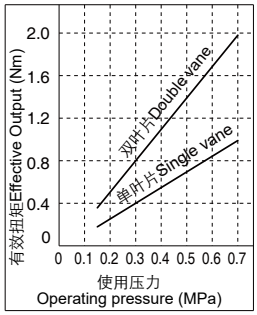

尺寸Size: 30

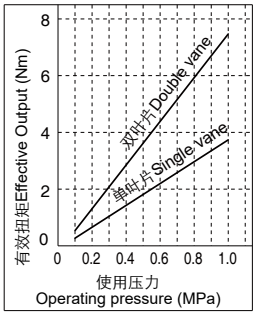

尺寸Size: 40

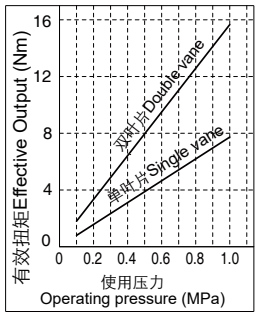

摆动范围 Rotation Range (从长轴侧看 Top View from Long Shaft Side)

(铣平位置为从 B 接口侧加压的状态 Chamfered positions shown is when Port B is pressurized)

单叶片 Single vane

90S

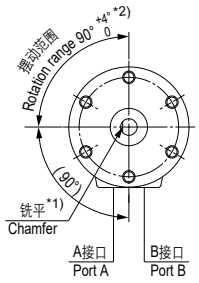

180S

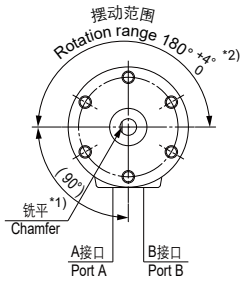

270S

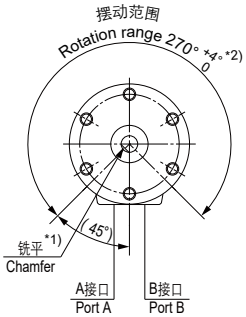

双叶片 Double vane

90D, 100D

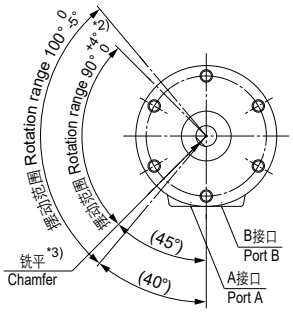

*1) 尺寸 40 为键形式代替铣平。A parallel key will be used instead of chamfer for size 40.
2) 对于尺寸 10 单叶片形式 , 90° , 180° , 270°的摆动角度公差为 0~+5°，对于尺寸 10 双叶片形式 , 90°的摆动角度公差为 0~+5°。
For size 10 single vane type only, the tolerance of rotating angle of 90° , 180° , 270° wil be 0~+5° .
For size 10 double vane type only, the tolerance of rotating angle of 90° wil be 0~+5° .
3) 双叶片式的铣平位置为 90°规格的位置。The chamfer position of the double vane type shows the 90° specification position.

缸体直接安装 Direct Mounting of Body

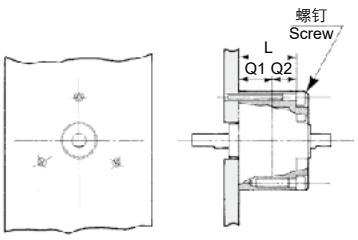

尺寸 Size	L *1)	螺钉 Screw *1)
10	11.5 (20.5) *2)	M2.5
15	16	M2.5
20	24.5	M3
30	34.5	M4
40	39.5	M4

*1) 表中的 L 为使用 JIS 标准内六角螺钉的尺寸，螺钉头部埋入安装孔内。
Dimension "L" is for usage of JIS standard hexagon socket head cap screws, the screw's head will fit in the mounting hole.
2) ( ) 为双叶片形式的尺寸。 ( ) shows the dimension of double vane type.
3) Q1 和 Q2 请参考后面的外形尺寸图。
Refer to dimensions on next pages for Q1 and Q2.

叶片式摆动气缸
Vane Type Rotary Actuator
Series KCRB2

外形尺寸图 Dimensions (mm)

尺寸15, 20, 30, 40 Size 15, 20, 30, 40

尺寸10 (单叶片式) Size 10 (Single Vane Type)

轴形式S, W Shaft Type S, W

KCRB2B

* 对于单叶片式，尺寸图表示90°和180° 在B接口加压的状态。
对于双叶片式，尺寸图表示在A接口或B接口加压时的摆动中间位置。
For single vane type, the figures below show the actuator for 90° and 180° when port B is pressurized.
For double vane type, the figures below show the intermediate rotation position when port A or port B is pressurized.

单轴S/侧面接管
Single shaft S/ Side ported

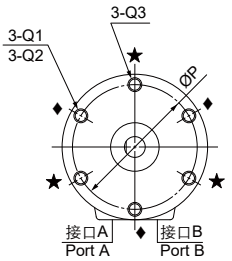

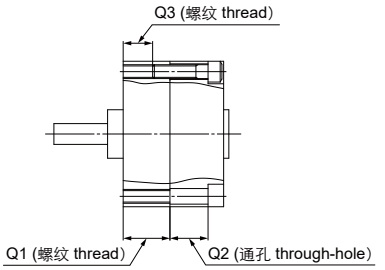

尺寸40的轴端形式
Shaft-end shape of size 40

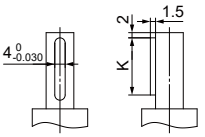

平行键尺寸Parallel key dimensions

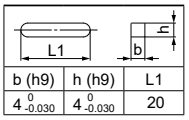

b (h9)	h (h9)	L1
4 0 -0.030	4 0 -0.030	20

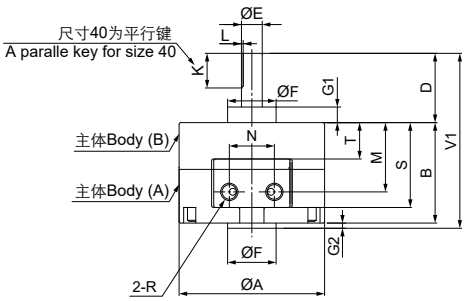

双轴W/侧面接管
Double shaft W/ Side ported

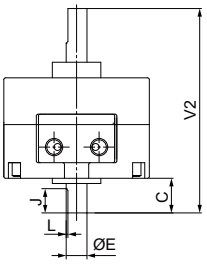

尺寸15~40/侧面接管
Size 15~40/ Side ported

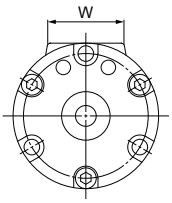

尺寸10/侧面接管
Size 10/ Side ported

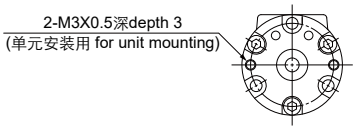

尺寸10~40/轴向接管
Size 10~40/ Axial ported

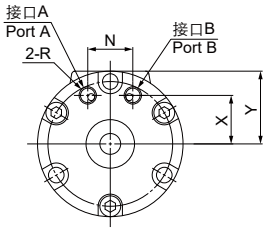

尺寸 Size	A	B	C	D	E(g7)	F(h9)	G1	G2	J	K	L	M	N	P	Q1	Q2	Q3	R	S	T	V1	V2	W	X	Y
10	29	15	8	14	4 -0.004 -0.016	9 0 -0.036	3	1	5	9	0.5	9.5	9.5	24	M3x0.5 深 depth 6	6	-	M3x0.5	14	3.6	30	37	19.8	8.5	14.5
15	34	20	9	18	5 -0.004 -0.016	12 0 -0.043	4	1.5	6	10	0.5	14	10	29	M3x0.5 深 depth 10	6	M3x0.5 深 depth 5	M3x0.5	19	7.6	39.5	47	21	11	17
20	42	29	10	20	6 -0.004 -0.016	14 0 -0.043	4.5	1.5	7	10	0.5	20	13	36	M4x0.7 深 depth 13.5	11	M4x0.7 深 depth 7.5	M5x0.8	24.5	10.5	50.5	59	22	14	21
30	50	40	13	22	8 -0.005 -0.020	16 0 -0.043	5	2	8	12	1.0	26	14	43	M5x0.8 深 depth 18	16.5	M5x0.8 深 depth 10	M5x0.8	34.5	14	64	75	24	15.5	25
40	63	45	15	30	10 -0.005 -0.020	25 0 -0.052	6.5	4.5	9	20	1.0	31	20	56	M5x0.8 深 depth 16	17.5	M5x0.8 深 depth 10	M5x0.8	39.8	17	79.5	90	30	21	31.6

叶片式摆动气缸
Vane Type Rotary Actuator
Series KCRB2

外形尺寸图 Dimensions (mm)

内置磁环/ 尺寸15, 20, 30, 40 Size15, 20, 30, 40 With Built-in Magnet

内置磁环/尺寸10 (单叶片式) Size 10 With Built-in Magnet (Single Vane Type)

轴形式W Shaft Type W

KCDRB2B

* 对于单叶片式，尺寸图表示90°和180° 在B接口加压的状态。
对于双叶片式，尺寸图表示在A接口或B接口加压时的摆动中间位置。
For single vane type, the figures below show the actuator for 90° and 180° when port B is pressurized.
For double vane type, the figures below show the intermediate rotation position when port A or port B is pressurized.

尺寸10, 15
Size 10, 15

* 3-★为缸体紧固螺钉使用，不用于外部安装。
3-★ are for tightening the body and not to be used for external mounting.

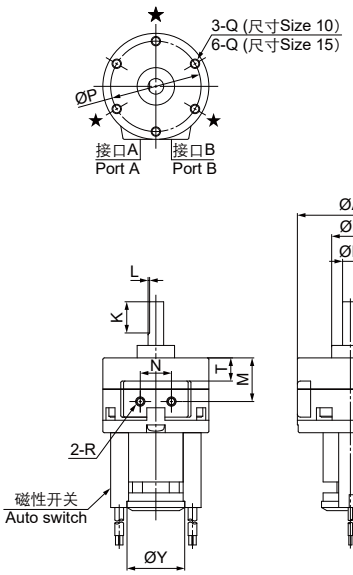

尺寸20, 30, 40
Size 20, 30, 40

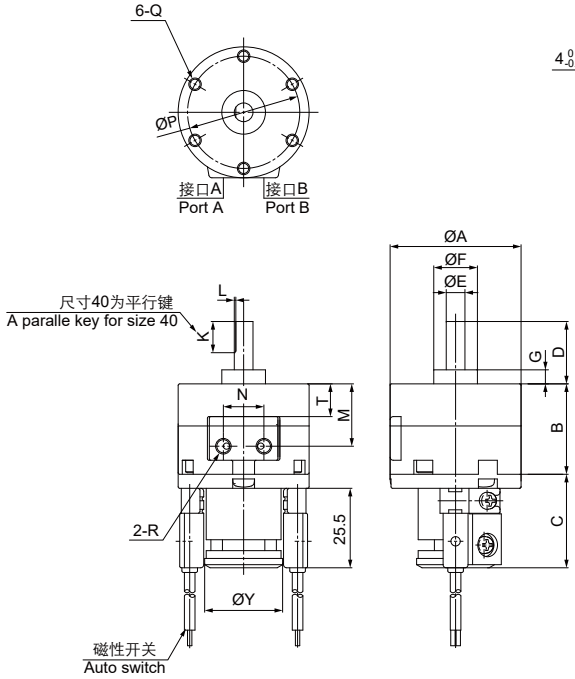

尺寸40的轴端形式
Shaft-end shape of size 40

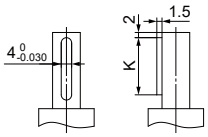

平行键尺寸
Parallel key dimensions

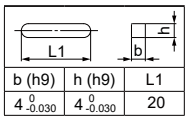

b (h9)	h (h9)	L1
4 0 -0.030	4 0 -0.030	20

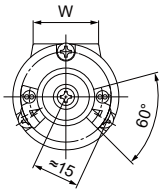

尺寸20, 30
Size 20, 30

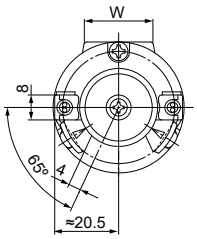

尺寸40
Size 40

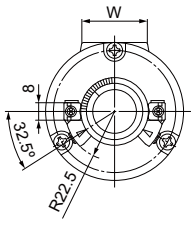

尺寸 Size	A	B	C	D	E(g7)	F(h9)	G	K	L	M	N	P	Q3	R	T	W	Y
10	29	15	29	14	4 -0.004 -0.016	9 0 -0.036	3	9	0.5	9.5	9.5	24	M3x0.5 深 depth 6	M3x0.5	3.6	19.8	18.5
15	34	20	29	18	5 -0.004 -0.016	12 0 -0.043	4	10	0.5	14	10	29	M3x0.5 深 depth 5	M3x0.5	7.6	21	18.5
20	42	29	30	20	6 -0.004 -0.016	14 0 -0.043	4.5	10	0.5	20	13	36	M4x0.7 深 depth 7	M5x0.8	10.5	22	25
30	50	40	31	22	8 -0.005 -0.020	16 0 -0.043	5	12	1.0	26	14	43	M5x0.8 深 depth 10	M5x0.8	14	24	25
40	63	45	31	30	10 -0.005 -0.020	25 0 -0.052	6.5	20	1.0	31	20	56	M5x0.8 深 depth 10	M5x0.8	17	30	31

叶片式摆动气缸
Vane Type Rotary Actuator
Series KCRB2

外形尺寸图 Dimensions (mm)

尺寸10 (双叶片式) Size 10 (Double Vane Type)

轴形式S, W Shaft Type S, W

KCRB2BS(W)10

内置磁环/尺寸10 (双叶片式)

Size 10 With Built-in Magnet (Double Vane Type)

轴形式W Shaft Type W

KCDRB2BW10

* 尺寸图表示在A接口或B接口加压时的摆动中间位置。
The figures below show the intermediate rotation position when port A or port B is pressurized.

单轴S/侧面接管
Single shaft S/ Side ported

* 3-★为缸体紧固螺钉使用，不用于外部安装。
3-★ are for tightening the body and not to be used for external mounting.

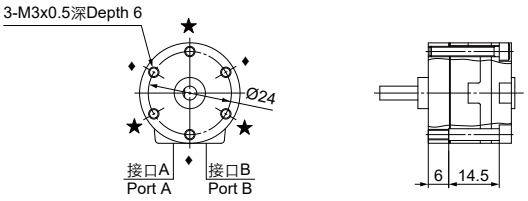

* 3-★为缸体紧固螺钉使用，不用于外部安装。
3-★ are for tightening the body and not to be used for external mounting.

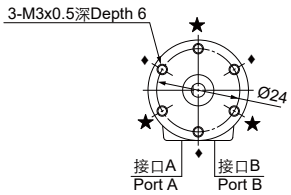

双轴W/侧面接管
Double shaft W/ Side ported

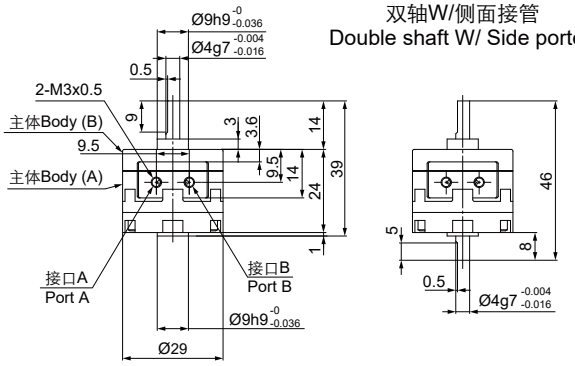

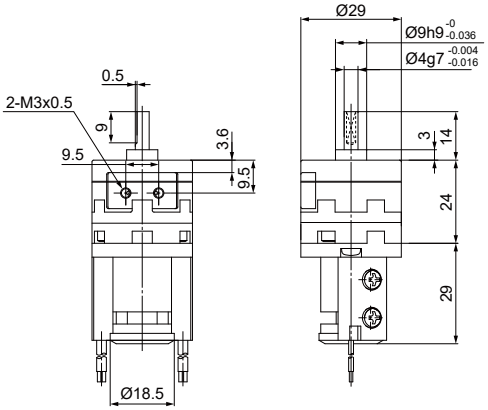

轴向接管Axial ported

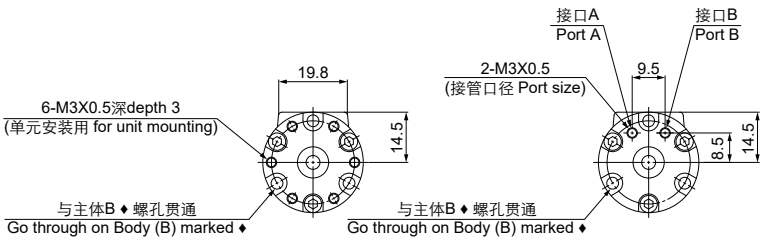

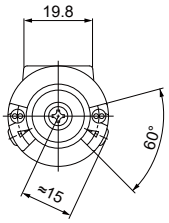

3

叶片式摆动气缸
Vane Type Rotary Actuator
Series KCRB2

外形尺寸图 Dimensions (mm)

尺寸10~40 Size 10~40

轴形式J, K, T, Y Shaft Type J, K, T, Y

内置磁环轴形式J, Shaft Type J With Built-in Magnet

双轴 J
Double Shaft J

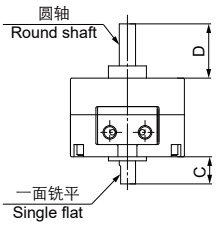

双轴 K
Double Shaft K

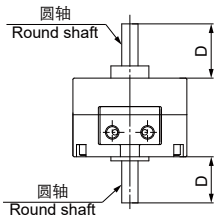

单轴 T
Single Shaft T

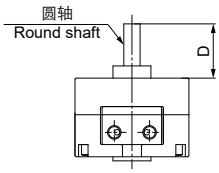

双轴 Y
Double Shaft Y

*尺寸40为平行键 A parallel key for size 40.

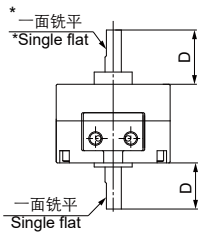

带磁环/双轴 J
With Built-in Magnet/
Double Shaft J
(仅侧面接管Side Ported Only)

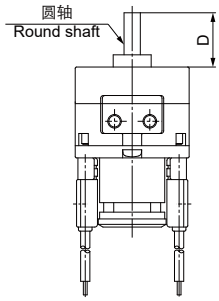

尺寸 Size	C	D
10	8	14
15	9	18
20	10	20
30	13	22
40	15	30

3

可选附件: 法兰 (尺寸10~30) Optional : Flange (Size 10~30)

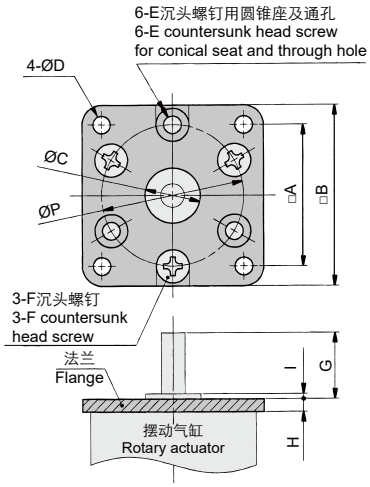

尺寸 Size	A	B	C	D	E	F	G	H	I	P
10	25	33	9	3.5	M3	M3	11.5	2.5	0.5	24
15	29	37	12	3.5	M3	M3	15.5	2.5	1.5	29
20	36	46	14	4.5	M4	M4	16.8	3.2	1.3	36
30	44	55	16	5.5	M5	M5	18.8	3.2	1.8	43

ARK 回转夹紧气缸
Rotary Clamp Air Cylinder
Series KMK (Ø12~Ø63)

规格 Specifications

缸径 Bore size (mm)	12	16	20	25	32	40	50	63
接管口径 Port size Rc(PT)	M5x0.8				1/8		1/4	
使用流体 Fluid	过滤压缩空气 Filtered compressed air							
动作形式 Action	双动 Double acting							
回转角度 Rotary angle	90° ±10°							
回转方向 Rotary direction	左 , 右 R: Clockwise L: Counterclockwise							
回转行程 Rotary stroke (mm)	7.5		9.5		15		19	
夹紧行程 Clamp stroke (mm)	10, 20, 30				10, 20, 30, 50			
理论夹紧力 Theoretical clamp force (N) (0.5MPa)	40	75	100	185	300	525	825	1400
保证耐压力 Proof pressure (MPa)	1.5							
使用压力范围 Operating pressure range (MPa)	0.1~1.0							0.1~0.6
环境及流体温度 Ambient and fluid temperature	-5~60℃ (未冻结 No freezing)							
活塞速度 Piston speed	50~200 mm/s							
缓冲 Cushion	橡胶缓冲 Rubber bumper							
行程公差 Stroke tolerance (mm)	$^{+0.6}_{-0.4}$							
* 润滑 Lubrication	不需要 Not required							
活塞杆不回转精度 Rod non-rotating accuracy	±1.4°	±1.2°			±0.9°		±0.7°	
磁性开关 Auto switch	D-M9BK							

* 如需要润滑请使用透平 1 号油 ISOVG32。Please use Turbine oil 1st Grade ISOVG32 if necessary.

型号表示方法 How to Order

KMK [B] [20] - [20] [R] [N]

安装形式 Mounting

B	通孔 / 两端螺孔 (标准) Through-hole/ both ends tapped (standard)
G	无杆侧法兰型 Rear flange (Ø32-Ø63)

缸径 Bore size (mm)

缸体选型 Body option

-	标准 (内螺纹) Standard (female)
N	带臂 With arm

行程 Stroke

10	10 mm (Ø12-Ø63)
20	20 mm (Ø12-Ø63)
30	30 mm (Ø12-Ø63)
50	50 mm (Ø32-Ø63)

回转方向 (未夹紧 - 夹紧) Rotary direction (Release-clamp)

R	右回转 Clockwise
L	左回转 Counterclockwise

回转夹紧气缸
Rotary Clamp Air Cylinder
Series KMK

外形尺寸图 Dimensions (mm)

Ø12, Ø16

KMKB

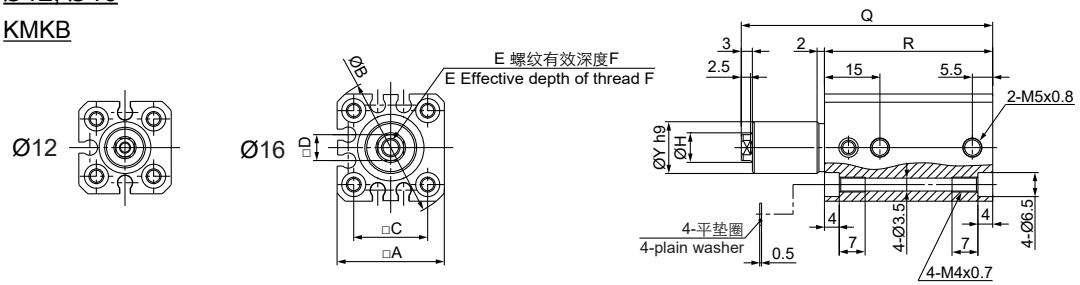

KMKB-N

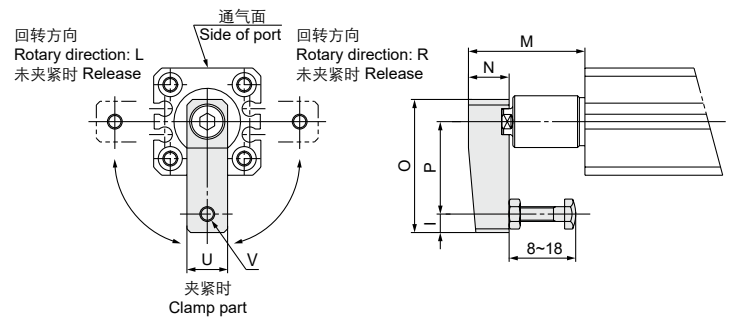

KMKG

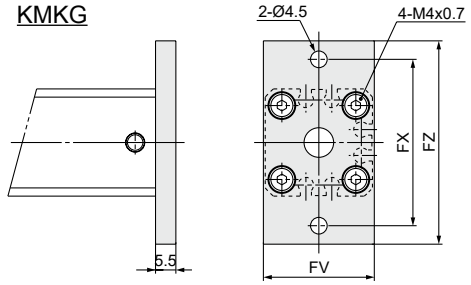

Ø20, Ø25

KMKB

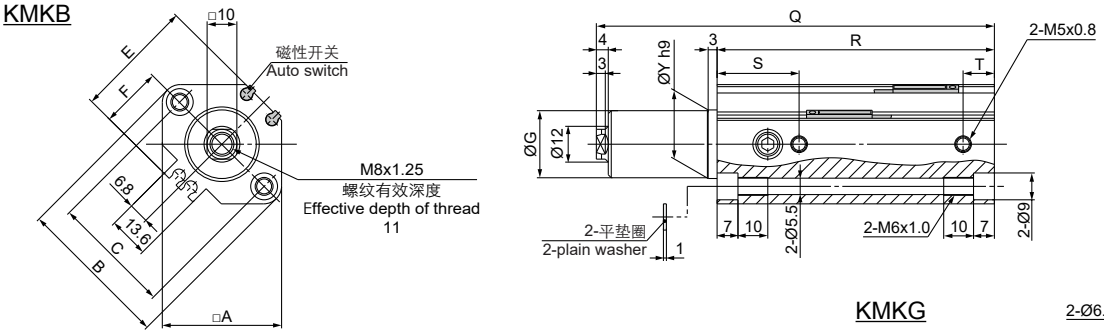

KMKG

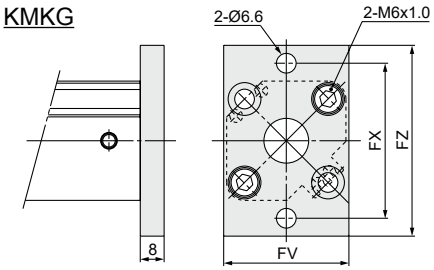

KMKB-N

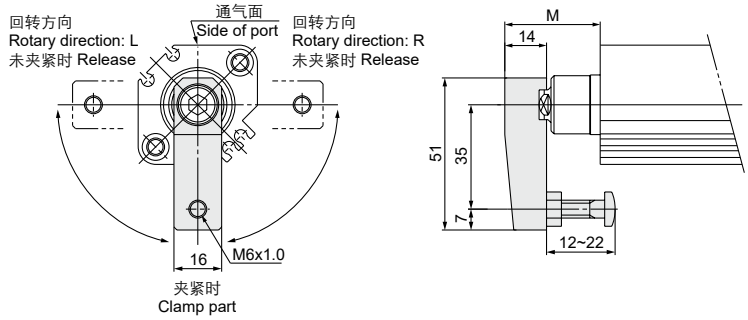

缸径 Bore size	A	B	C	D	E	F	FV	FX	FZ	G	H	I	N	O	P	S	T	U	V	Y
12	25	32	15.5	5	M3x0.5	5.5	25	45	55	-	6	4	8	29	20	-	-	8	M3x0.5	$11^{0}_{-0.043}$
16	29	38	20	7	M5x0.8	6.5	30	45	55	-	8	5	11	36	25	-	-	11	M4x0.7	$14^{0}_{-0.043}$
20	36	47	36	-	35.5	18	39	48	60	17.9	-	-	-	-	-	28	9	-	-	$18^{0}_{-0.043}$
25	40	52	40	-	40.5	21	42	52	64	22.5	-	-	-	-	-	27.5	10.5	-	-	$23^{0}_{-0.052}$

缸径 Bore size	杆状态 Rod status	夹紧行程 Clamp stroke								
		10 mm			20 mm			30 mm		
		M	Q	R	M	Q	R	M	Q	R
12	缩回 Retract	28.5	68	45.5	38.5	88	55.5	48.5	108	65.5
	伸出 Extend	46	85.5		66	115.5		86	145.5	
16	缩回 Retract	31.5	68	45.5	41.5	88	55.5	51.5	108	65.5
	伸出 Extend	49	85.5		69	115.5		89	145.5	
20	缩回 Retract	32	92.5	72	42	112.5	82	52	132.5	92
	伸出 Extend	51.5	112		71.5	142		91.5	172	
25	缩回 Retract	32	93.5	73	42	113.5	83	52	133.5	93
	伸出 Extend	51.5	113		71.5	143		91.5	173	

回转夹紧气缸
Rotary Clamp Air Cylinder
Series KMK

外形尺寸图 Dimensions (mm)

Ø32~Ø63

KMKB

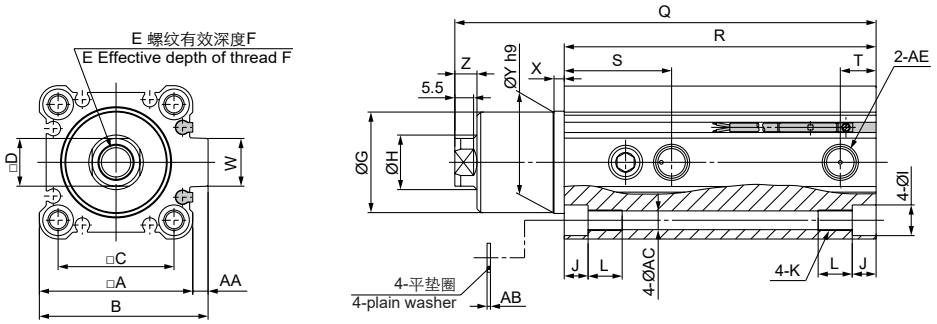

KMKB-N

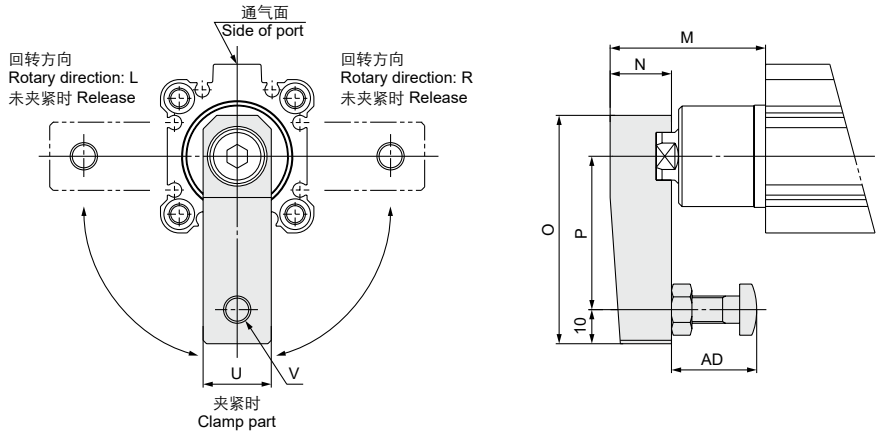

KMKG

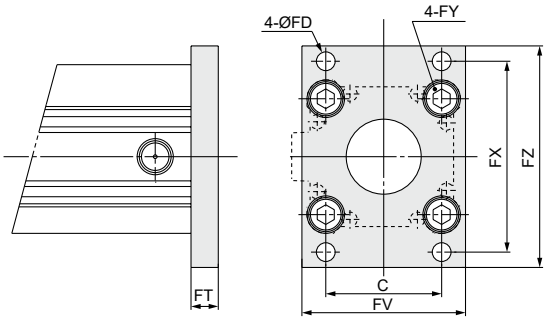

缸径 Bore size	杆状态 Rod status	夹紧行程 Clamp stroke											
		10 mm			20 mm			30 mm			50 mm		
		M	Q	R	M	Q	R	M	Q	R	M	Q	R
32	缩回 Retract	45.5	113.5	81.5	55.5	133.5	91.5	65.5	153.5	101.5	85.5	193.5	121.5
	伸出 Extend	70.5	138.5		90.5	168.5		110.5	198.5		150.5	258.5	
40	缩回 Retract	53	114.5	75	63	134.5	85	73	154.5	95	93	194.5	115
	伸出 Extend	78	139.5		98	169.5		118	199.5		158	259.5	
50	缩回 Retract	63	132	86.5	73	152	96.5	83	172	106.5	103	212	126.5
	伸出 Extend	92	161		112	191		132	221		172	281	
63	缩回 Retract	62.5	135	90	72.5	155	100	82.5	175	110	102.5	215	130
	伸出 Extend	91.5	164		111.5	194		131.5	224		171.5	284	

缸径 Bore size	A	AA	AB	AC	AD	AE	B	C	D	E	F	FD	FT	FV	FX	FY	FZ	G	H	I	J	K	L	N	O	P	S	T	U	V	W	X	Y	Z
32	45	4.5	1	5.5	15~25	1/8	49.5	34	14	M10x1.5	12	5.5	8	48	56	M6x1.0	65	29.5	16	9	7	M6x1.0	10	18	67	45	31.5	10.5	20	M8x1.25	14	3	$30^{0}_{-0.062}$	6.5
40	52	5	1	5.5	15~25	1/8	57	40	14	M10x1.5	12	5.5	8	54	62	M6x1.0	72	29.5	16	9	7	M6x1.0	10	18	67	45	29	9	20	M8x1.25	15	3	$30^{0}_{-0.062}$	6.5
50	64	7	1	6.6	30~40	1/4	71	50	17	M12x1.75	15	6.6	9	67	76	M8x1.25	89	36.5	20	11	8	M8x1.25	14	22	88	65	34	11.5	22	M10x1.5	19	3.5	$37^{0}_{-0.062}$	7.5
63	77	7	1.4	9	30~40	1/4	84	60	17	M12x1.75	15	9	9	80	92	M10x1.5	108	47.5	20	14	10.5	M10x1.5	18	22	88	65	34.5	10.5	22	M10x1.5	19	3.5	$48^{0}_{-0.062}$	7.5

ARK 转角气缸

Rotary Clamp Air Cylinder

Series ACK (Ø25~Ø63)

规格 Specifications

缸径 Bore size (mm)		25	32	40	50	63
接管口径 Port size Rc(PT)		M5x0.8	1/8			
使用流体 Fluid		过滤压缩空气 Filtered compressed air				
动作形式 Action		双动 Double acting				
回转角度 Rotary angle		90°, 180°				
回转方向 Rotary direction		左, 右 R: Clockwise L: Counterclockwise				
回转行程 Rotary stroke (mm)	90°	14		15	15	
	180°	20		21	21	
夹紧行程 Clamp stroke (mm)	90°	12		12	14	
	180°	6		6	8	
总行程 Total stroke (mm)	90° / 180°	26		27	29	
理论夹紧力 Theoretical clamp force (N) (0.5MPa)		168	301	527	824	1401
保证耐压力 Proof pressure (MPa)		1.5				
使用压力范围 Operating pressure range (MPa)		0.15~1.0				
环境及流体温度 Ambient and fluid temperature		-5~60℃ (未冻结 No freezing)				
活塞速度 Piston speed		50~200 mm/s				
行程公差 Stroke tolerance (mm)		$^{+1.0}_{0}$				
* 润滑 Lubrication		不需要 Not required				
回转角度公差 Rotation angle tolerance		±1.5°				

* 如需要润滑请使用透平 1 号油 ISOVG32。Please use Turbine oil 1st Grade ISOVG32 if necessary.

型号表示方法 How to Order

ACK R 25 - 90

系列 Series

ACK	单边转臂 Single rotary arm
ACKD	双边转臂 (仅回转角度 90°) Double rotary arm (only 90° rotary angle)

缸径 Bore size (mm)

回转角度 Rotary angle

90	90°
180	180°

回转方向 (未夹紧 - 夹紧) Rotary direction (Release-clamp)

R	右回转 Clockwise
L	左回转 Counterclockwise

3

转角气缸
Rotary Clamp Air Cylinder
Series ACK

外形尺寸图 Dimensions (mm)

ACK

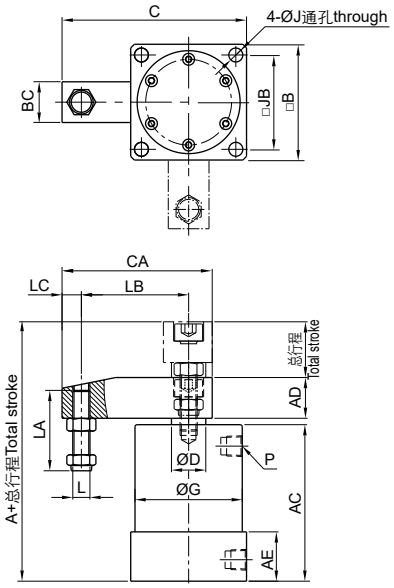

ACKD

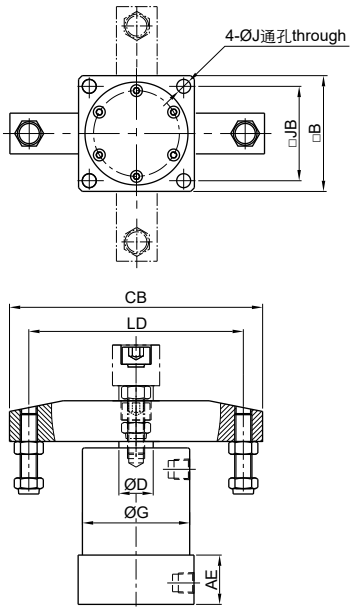

缸径 Bore size	A	AC	AD	AE	B	BC	C	CA	CB	D	G	J	JB	L	LA	LB	LC	LD	P
25	85	65	16	23	40	16	58	48	76	14	35	4.5	30	M6x1.0	29.5	30	8	60	M5x0.8
32	95	73	19	23	54	19	86	70	118	16	50	6.5	44	M8x1.25	37.5	50	9	100	1/8
40	97	74	19	26	58	19	88	70	118	16	55	6.5	48	M8x1.25	37.5	50	9	100	1/8
50	109.5	80	25.5	26	68	25.5	114	93	160	20	60	8.5	55	M10x1.5	45	70	10	140	1/8
63	115.5	86	25.5	30	82	25.5	121	93	160	20	70	8.5	64	M10x1.5	45	70	10	140	1/8

ARK

角度开闭气爪
Angular Style Air Gripper
Series KMHC2 (Ø10~Ø25)

规格 Specifications

缸径 Bore size (mm)		10	16	20	25
接管口径 Port size Rc(PT)		M3x0.5	M5x0.8		
使用流体 Fluid		过滤压缩空气 Filtered compressed air			
动作形式 Action		双动 , 单动 Double acting, single acting			
使用压力范围 Operating pressure range	双动 Double acting	0.1~0.6 MPa			
	单动 Single acting	0.25~0.6 MPa			
环境及流体温度 Ambient and fluid temperature		-5~60℃ (未冻结 No freezing)			
开闭角度 Opening/ closing angle		-10° ~30°			
有效夹持力矩 Effective gripping moment (N·m) (0.5 MPa)	双动 Double acting	0.10	0.39	0.70	1.36
	单动 Single acting	0.07	0.31	0.54	1.08
重复精度 Repeatability (mm)		±0.01			
最高动作频率 Max. opening frequency		180 c.p.m			
* 润滑 Lubrication		不需要 Not required			
磁性开关 / 开关固定码 Auto switch/ Switch clamp		D-M9BK/ PS			

* 如需要润滑请使用透平 1 号油 ISOVG32。Please use Turbine oil 1st Grade ISOVG32 if necessary.

型号表示方法 How to Order

KMHC2 - 20 D

缸径
Bore size

动作形式 Action

D	双动 Double acting
S	单动 Single acting

3

角度开闭气爪
Angular Style Air Gripper
Series KMHC2

外形尺寸图 Dimensions (mm)

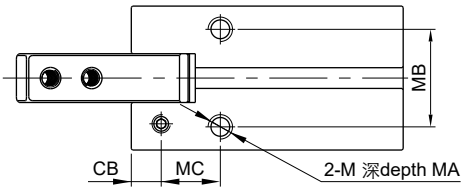

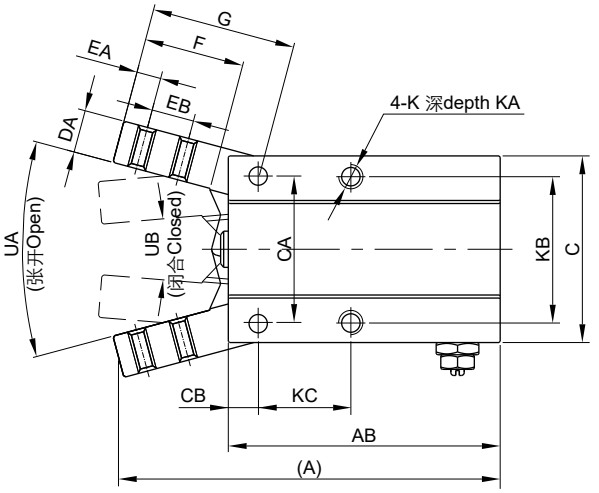

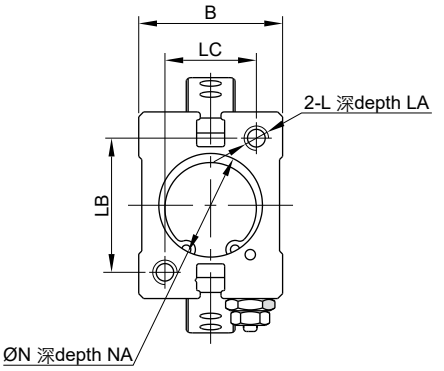

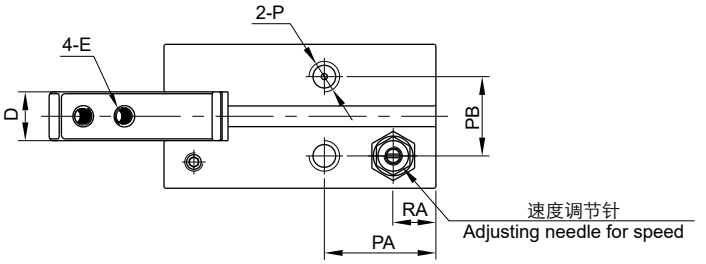

缸径 Bore size	A	AB	B	C	CA	CB	D	DA	E	EA	EB	F	G	K	KA	KB	KC	L	LA	LB	LC	M
10	52.4	38.6	16.4	23	10	2.8	6.4	4	M2.5x0.45	3	5.7	12	17.2	M3x0.5	5	16	12.8	M3x0.5	6	18	12	M3x0.5
16	62.5	44.6	23.6	30.6	16	3.9	8	7	M3x0.5	4	7	16	22.6	M4x0.7	8	24	16.2	M4x0.7	8	22	15	M4x0.7
20	78.7	55.2	27.6	42	20	4.5	10	8	M4x0.7	5.2	9	20	28	M5x0.8	10	30	21.7	M5x0.8	10	32	18	M5x0.8
25	92	60.4	33.6	52	25	4.6	12	10	M5x0.8	8	12	27	37.5	M6x1.0	12	36	25.8	M6x1.0	12	40	22	M6x1.0

缸径 Bore size	MA	MB	MC	N	NA	P	PA	PB	RA	UA	UB
10	6	11.4	8.8	$11^{+0.043}_{0}$	1.5	M3x0.5	18.8	10.4	7.2	30°	10°
16	6.5	16	10.7	$17^{+0.043}_{0}$	1.5	M5x0.8	18.3	13	7	30°	10°
20	8	18.6	15.7	$21^{+0.052}_{0}$	1.5	M5x0.8	22.2	15	7.5	30°	10°
25	10	22	19.3	$26^{+0.052}_{0}$	1.5	M5x0.8	23.5	20	7.7	30°	10°

ARK

角度开闭气爪
Angular Style Air Gripper
Series KMHC2M (Ø12~Ø32)

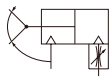

规格 Specifications

缸径 Bore size (mm)		12	16	20	25	32
接管口径 Port size Rc(PT)		M3x0.5	M5x0.8			
使用流体 Fluid		过滤压缩空气 Filtered compressed air				
动作形式 Action		双动 Double acting				
使用压力范围 Operating pressure range		0.15~0.7 MPa				
环境及流体温度 Ambient and fluid temperature		-5~60℃ (未冻结 No freezing)				
开闭角度 Opening/ closing angle		-10° ~30°				
最大爪臂接点长度 Max. gripping point length L (mm)		30	40	60	70	85
*1) 理论夹持力矩 Theoretical gripping moment M (N·cm)	闭侧 Closing side	40xP	90xP	170xP	340xP	610xP
	开侧 Opening side	50xP	120xP	230xP	440xP	810xP
有效夹持力 Effective gripping force F (N)		F=M/Lx0.85				
最高动作频率 Max. opening frequency		180 c.p.m				
*2) 润滑 Lubrication		不需要 Not required				
磁性开关 Auto switch		D-M9BK				

*1) P: 使用压力 Operating pressure (MPa)
2) 如需要润滑请使用透平 1 号油 ISOVG32。Please use Turbine oil 1st Grade ISOVG32 if necessary.

型号表示方法 How to Order

KMHC2M - 16 D

缸径 Bore size

动作形式 Action

D	双动 Double acting

3

角度开闭气爪
Angular Style Air Gripper
Series KMHC2M

外形尺寸图 Dimensions (mm)

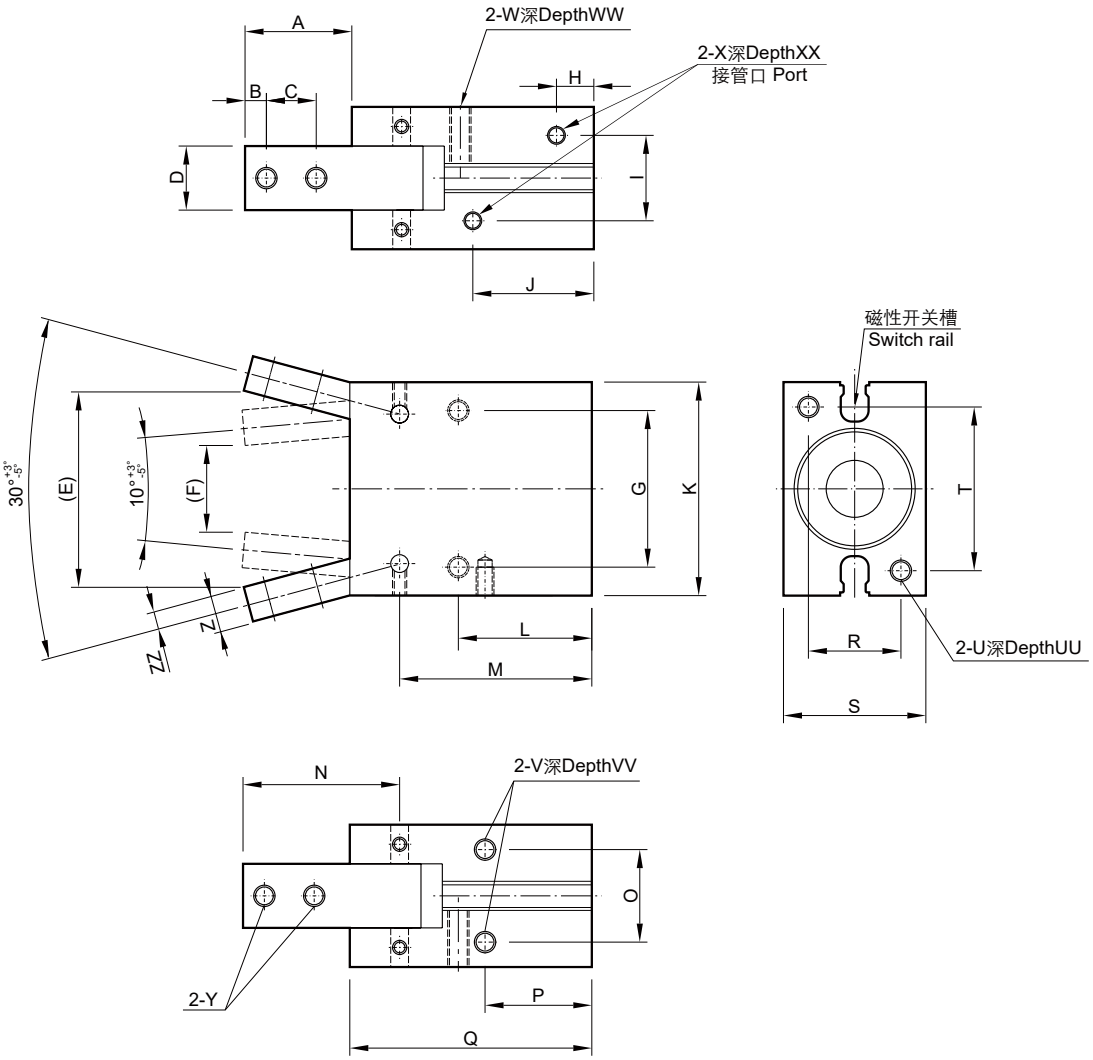

缸径 Bore size	A	B	C	D	E	F	G	H	I	J	K	L	M	N	O	P	Q	R	S	T	U	UU
12	15.4	3	6	7	26.3	9	20	7.5	10.2	10.2	28	20	32.9	21.5	10.2	16	39	10	16	22	M3x0.5	5
16	17.5	3	8	9	31.1	14	24	7.5	12	12	34	22.5	35	25	14	18	42.5	14	22	26	M4x0.7	7
20	22	4	10	12	40.1	18	30	8.0	13	13	45	25	39.5	32.5	16	19	50	16	26	35	M5x0.8	8
25	26	5	12	14	47.9	21	36	8.5	18	18	52	28.5	45.5	38.5	20	21.5	58	20	32	40	M6x1.0	10
32	30	6	14	18	55.1	24	44	10.5	24	24	60	37.5	54	44	26	30	68	26	40	46	M6x1.0	10

缸径 Bore size	V	VV	W	WW	X	XX	Y	Z	ZZ
12	M3x0.5	5	M3x0.5	8	M3x0.5	5	M3x0.5	5	2.5
16	M4x0.7	7	M4x0.7	11	M5x0.8	5	M3x0.5	6	3
20	M5x0.8	8	M5x0.8	12	M5x0.8	5	M4x0.7	7	3.5
25	M6x1.0	8	M6x1.0	16	M5x0.8	5	M5x0.8	9	4
32	M6x1.0	8	M6x1.0	20	M5x0.8	5	M6x1.0	10	5

ARK

180°角度开闭气爪
180° Angular Style Air Gripper
Series KMHY2 (Ø10~Ø25)

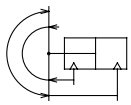

规格 Specifications

缸径 Bore size (mm)		10	16	20	25
接管口径 Port size Rc(PT)		M5x0.8			
使用流体 Fluid		过滤压缩空气 Filtered compressed air			
动作形式 Action		双动 Double acting			
使用压力范围 Operating pressure range (MPa)		0.1~0.6			
环境及流体温度 Ambient and fluid temperature		-5~60℃ (未冻结 No freezing)			
有效夹持力 Effective gripping force (0.5 MPa) (N·m)		0.16	0.54	1.10	2.28
开闭角度 (两边) Opening/ closing angle (both sides)	张开 Opening	180°			
	闭合 Closing	-3°			
重复精度 Repeatability		±0.2 mm			
最高动作频率 Max. opening frequency		60 c.p.m			
* 润滑 Lubrication		不需要 Not required			
磁性开关 Auto switch		D-M9BK			

* 如需要润滑请使用透平 1 号油 ISOVG32。Please use Turbine oil 1st Grade ISOVG32 if necessary.

型号表示方法 How to Order

KMHY2 - 16 D 2

缸径
Bore size

动作形式 Action

D	双动 Double acting

手指选型
Finger option

-	标准螺纹安装 Standard tapped mounting
2	开闭方向通孔 Through-holes in opening/ closing direction

3

180°角度开闭气爪
180° Angular Style Air Gripper
Series KMHY2

外形尺寸图 Dimensions (mm)

KMHY2-D

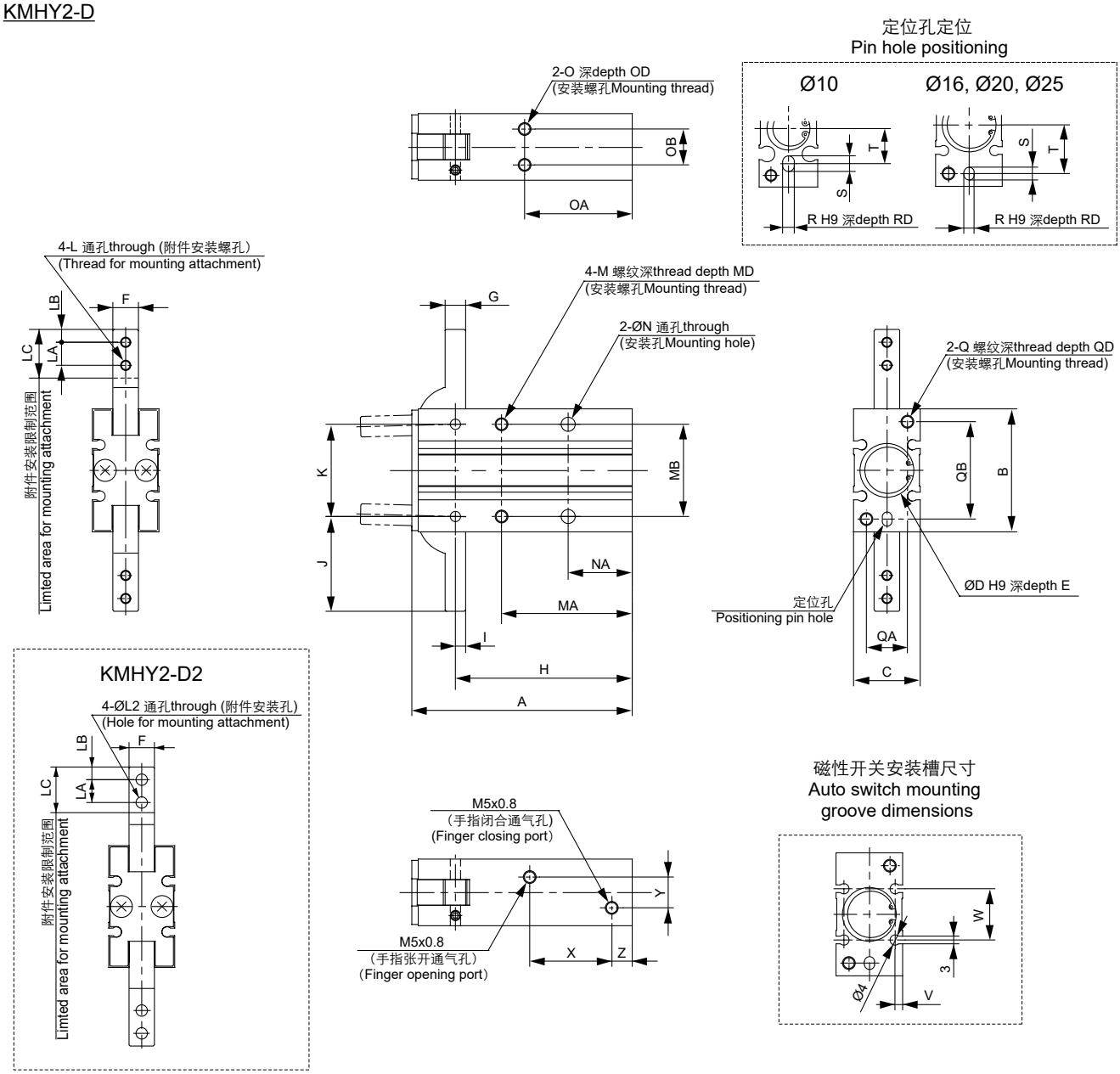

缸径 Bore size	A	B	C	D	E	F	G	H	I	J	K	L	L2	LA	LB	LC	M	MA	MB	MD	N	NA	O	OA	OB	OD
10	58	30	15	$11^{+0.043}_{0}$	1.5	$6^{-0.005}_{-0.025}$	4	47.5	2	23.5	22	M3x0.5	3.4	6	3	12	M3x0.5	35	24	6	3.4	18	M3x0.5	30	9	4
16	69	38	20	$17^{+0.043}_{0}$	1.5	$8^{-0.005}_{-0.025}$	5	55.5	2.5	28.5	28	M3x0.5	3.4	7	4	14	M4x0.7	41	30	8	4.5	20	M4x0.7	33	12	5
20	86	48	26	$21^{+0.052}_{0}$	1.5	$10^{-0.005}_{-0.025}$	8	69	4	37	36	M4x0.7	4.5	9	5	18	M5x0.8	50	36	10	5.5	25	M5x0.8	42	14	8
25	107	58	30	$26^{+0.052}_{0}$	1.5	$12^{-0.005}_{-0.025}$	10	86	5	45	45	M5x0.8	5.5	12	6	22.5	M6x1.0	60	42	12	6.6	30	M6x1.0	50	16	10

缸径 Bore size	Q	QA	QB	QD	R	RD	S	T	V	W	X	Y	Z
10	M3x0.5	9	24	6	$3^{+0.025}_{0}$	3	4	9	2	13	23	3	7
16	M4x0.7	12	30	8	$3^{+0.025}_{0}$	3	4	15	2.5	18	25	8	7
20	M5x0.8	16	38	10	$4^{+0.030}_{0}$	4	5	19	3	20	32	12	8
25	M6x1.0	18	46	12	$4^{+0.030}_{0}$	4	5	23	3	24	42	14	8

ARK

平行开闭气爪
Parallel Style Air Gripper
Series KMHZ2 (Ø6~Ø40)

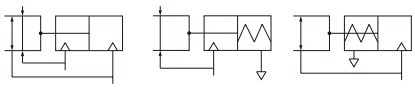

规格 Specifications

缸径 Bore size (mm)			6	10	16	20	25	32	40
接管口径 Port size Rc(PT)			M3x0.5		M5x0.8				
使用流体 Fluid			过滤压缩空气 Filtered compressed air						
动作形式 Action			双动，单动 Double acting, single acting						
使用压力范围 Operating pressure range (MPa)		双动 Double acting	0.2~0.7		0.1~0.7				
		单动 Single acting	0.35~0.7		0.25~0.7				
环境及流体温度 Ambient and fluid temperature			-5~60℃ (未冻结 No freezing)						
*1) 有效夹持力 Effective gripping force (N·cm) (0.5 MPa)	双动 Double acting	开侧 External	6.1	17	45	68	102	195	320
		闭侧 Internal	3.3	11	34	45	69	160	255
	单动 (常开) Single acting N.O.	开侧 External	-	-	-	-	-	-	-
		闭侧 Internal	1.9	7	27	35	55	133	220
	单动 (常闭) Single acting N.C.	开侧 External	3.7	13	38	59	87	163	270
		闭侧 Internal	-	-	-	-	-	-	-
开闭行程 Opening/ closing stroke (mm)			4	4	6	10	14	22	30
重复精度 Repeatability (mm)			±0.01					±0.02	
最高动作频率 Max. opening frequency			180 c.p.m					60 c.p.m	
*2) 润滑 Lubrication			不需要 Not required						
磁性开关 Auto switch			D-M9BK						

*1) 夹持点距离 L=20mm，行程在中间时的数值。
Gripping point L=20mm, at center of stroke.
2) 如需要润滑请使用透平 1 号油 ISOVG32。Please use Turbine oil 1st Grade ISOVG32 if necessary.

型号表示方法 How to Order

KMHZ2 - 16 D

缸径
Bore size

动作形式 Action

D	双动 Double acting
C	单动常闭 Single acting N.C.
S	单动常开 Single acting N.O.

3

平行开闭气爪
Parallel Style Air Gripper
Series KMHZ2

外形尺寸图 Dimensions (mm)

Ø6

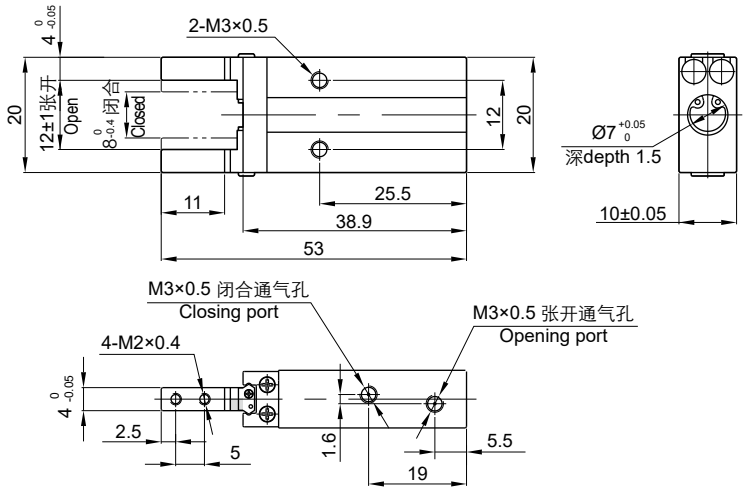

Ø10~Ø40

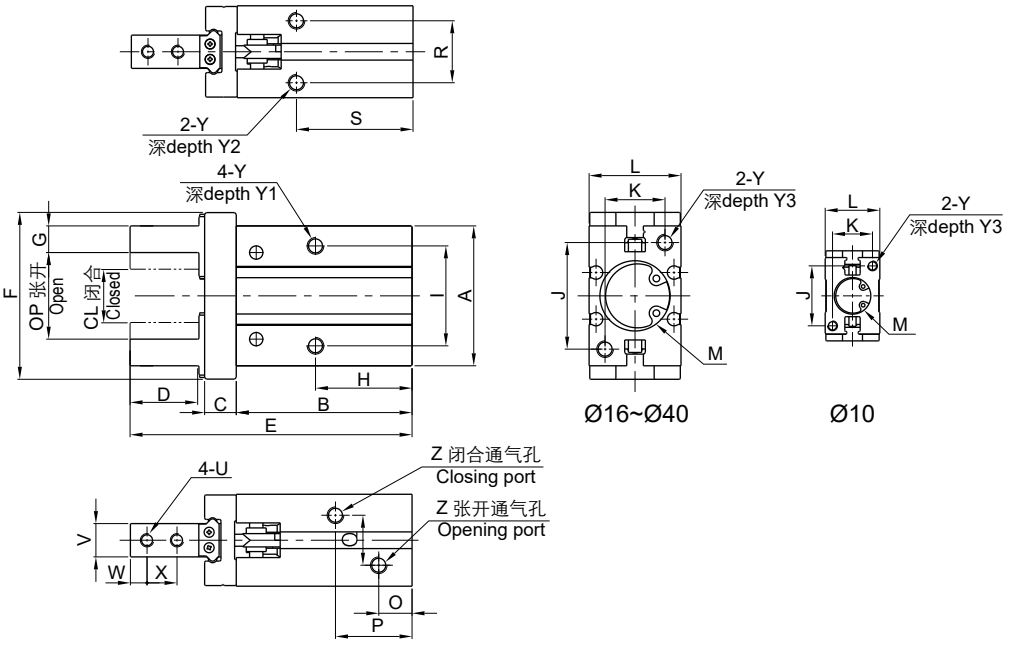

型号 Model	A	B	C	CL	D	E	F	G	H	I	J	K	L	M	O	OP	P	Q	R	S
KMHZ2-10	23	37.6	6	11.2 $^{0}_{-0.7}$	12	57	29	4 $^{0}_{-0.05}$	23	16	18	12	16.4	Ø11 $^{+0.05}_{0}$ 深 depth 2	7.5	15.2 $^{+2}_{0}$	19	10	11.4	27
KMHZ2-16	30.6	42.5	7.5	14.9 $^{0}_{-0.7}$	15	67.3	38	5 $^{0}_{-0.05}$	24.5	24	22	15	23.6	Ø17 $^{+0.05}_{0}$ 深 depth 2	7.5	20.9 $^{+2}_{0}$	19	13	16	30
KMHZ2-20	42	52.8	9.5	16.3 $^{0}_{-0.7}$	20	84.7	50	8 $^{0}_{-0.05}$	29	30	32	18	27.6	Ø21 $^{+0.05}_{0}$ 深 depth 3	9.7	26.3 $^{+2}_{0}$	23	15	18.6	35
KMHZ2-25	52	63.6	11	19.3 $^{0}_{-0.8}$	25	102.7	63	10 $^{0}_{-0.05}$	30	36	40	22	33.6	Ø26 $^{+0.05}_{0}$ 深 depth 3.5	10	33.3 $^{+2.5}_{0}$	23.8	20	22	36.5
KMHZ2-32	60	67(76)	12	26 $^{0}_{-0.5}$	29	113(122)	97	12 $^{0}_{-0.05}$	40(49)	46	46	26	40	Ø34 $^{+0.05}_{0}$ 深 depth 4	11	48 $^{+2.5}_{0}$	31(40)	24	26	48(57)
KMHZ2-40	72	83(96)	15	30 $^{0}_{-0.5}$	36	139(152)	119	14 $^{0}_{-0.05}$	49(62)	56	56	32	48	Ø42 $^{+0.05}_{0}$ 深 depth 4	12	60 $^{+2.5}_{0}$	38(50)	28	32	58(71)

型号 Model	U	V	W	X	Y	Y1	Y2	Y3	Z
KMHZ2-10	M2.5x0.45	5 $^{0}_{-0.05}$	3	5.7	M3x0.5	5.5	6	6	M3x0.5
KMHZ2-16	M3x0.5	8 $^{0}_{-0.05}$	4	7	M4x0.7	8	4.5	8	M5x0.8
KMHZ2-20	M4x0.7	10 $^{0}_{-0.05}$	5	9	M5x0.8	10	8	10	M5x0.8
KMHZ2-25	M5x0.8	12 $^{0}_{-0.05}$	6	12	M6x1.0	12	10	12	M5x0.8
KMHZ2-32	M6x1.0	15 $^{0}_{-0.05}$	7	14	M6x1.0	13	10	13	M5x0.8
KMHZ2-40	M8x1.25	18 $^{0}_{-0.05}$	9	17	M8x1.25	16	13	17	M5x0.8

*( )为单动型尺寸。( ) shows the dimensions of single acting style.

ARK 三爪平行开闭气爪

3-Finger Parallel Style Air Gripper

Series KMHS3 (Ø16~Ø125)

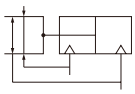

规格 Specifications

缸径 Bore size (mm)		16	20	25	32	40	50	63	80	100	125
接管口径 Port size Rc(PT)		M3x0.5	M5x0.8						1/8	1/4	3/8
使用流体 Fluid		过滤压缩空气 Filtered compressed air									
动作形式 Action		双动 Double acting									
使用压力范围 Operating pressure range (MPa)		0.2~0.6			0.1~0.6						
环境及流体温度 Ambient and fluid temperature		-5~60℃ (未冻结 No freezing)									
*1) 有效夹持力 Effective gripping force (0.5 MPa) (N)	开侧 External	14	25	42	74	118	187	335	500	750	1270
	闭侧 Internal	16	28	47	82	130	204	359	525	780	1320
开闭行程 Opening/ closing stroke (mm)		4	4	6	8	8	12	16	20	24	32
重复精度 Repeatability (mm)		±0.01									
最高动作频率 Max. opening frequency		120 c.p.m			60 c.p.m				30 c.p.m		
*2) 润滑 Lubrication		不需要 Not required									
磁性开关 / 开关固定码 Auto switch/ Switch clamp		D-M9BK/ -			D-M9BK/ PS						

*1) 夹持点距离 L=20mm (Ø16~Ø25), L=30mm (Ø32~Ø63), L=50mm (Ø80~Ø125) 时的数值。
Values for when gripping point L=20mm (Ø16~Ø25), L=30mm (Ø32~Ø63), L=50mm (Ø80~Ø125)。
2) 如需要润滑请使用透平 1 号油 ISOVG32。Please use Turbine oil 1st Grade ISOVG32 if necessary.

型号表示方法 How to Order

KMHS3 - 3 2 D

缸径
Bore size

动作形式 Action

D	双动 Double acting

3

三爪平行开闭气爪
3-Finger Parallel Style Air Gripper
Series KMHS3

外形尺寸图 Dimensions (mm)

Ø16~Ø25

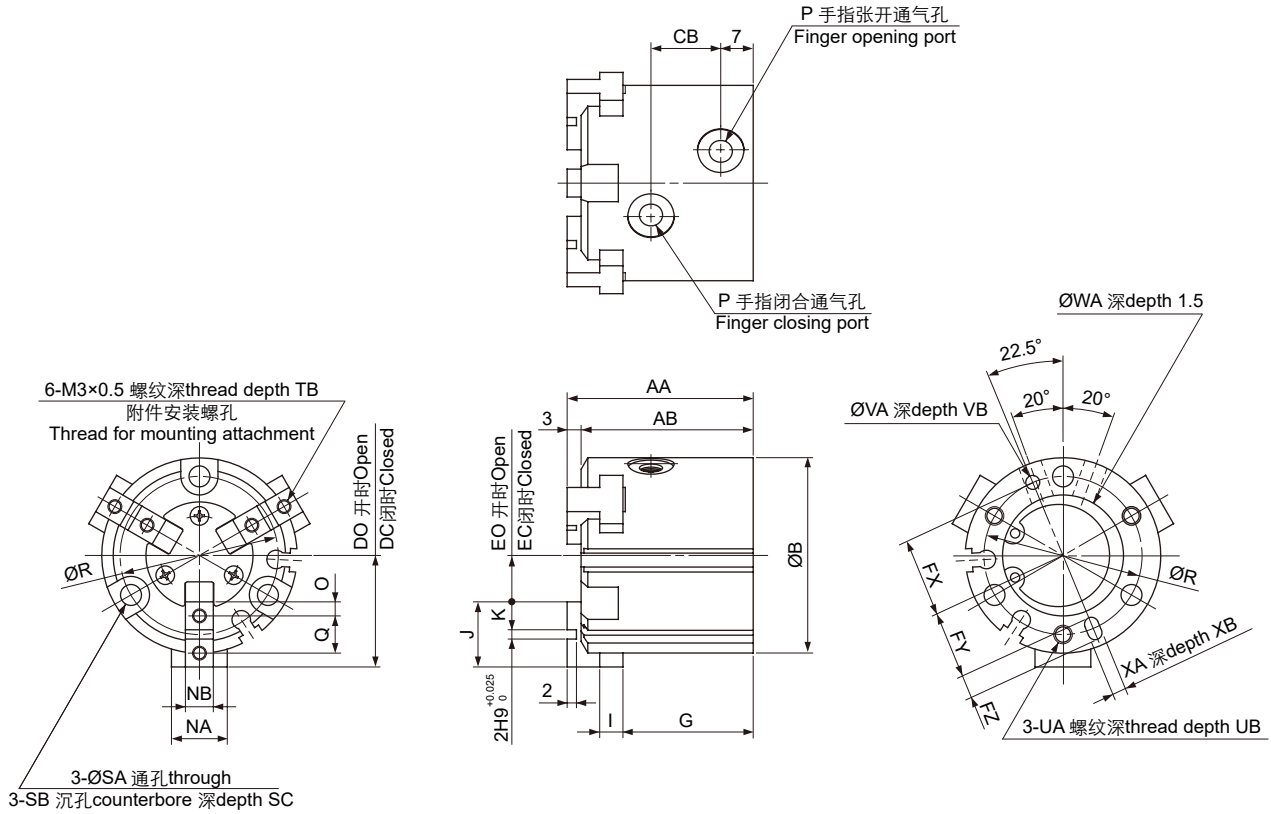

型号 Model	AA	AB	B	CB	DC	DO	EC	EO	FX	FY	FZ	G	I	J	K	NA	NB	O	P	Q	R	SA	SB	SC
KMHS3-16D	35	32	30	11	15	17	5	7	12.5	11	3	25	4	10	4	8	$5h9^{0}_{-0.030}$	2	M3x0.5	6	25	3.4	6.5	8
KMHS3-20D	38	35	36	13	18	20	6	8	14.5	13	3	27	5	12	5	10	$6h9^{0}_{-0.030}$	2.5	M5x0.8	7	29	3.4	6.5	9.5
KMHS3-25D	40	37	42	15	21	24	7	10	17	14.5	5	28	5	14	6	12	$6h9^{0}_{-0.030}$	3	M5x0.8	8	34	4.5	8	10

型号 Model	TB	UA	UB	VA	VB	WA	XA	XB
KMHS3-16D	5	M3x0.5	4.5	$2H9^{+0.025}_{0}$	2	$17H9^{+0.043}_{0}$	$2H9^{+0.025}_{0}$	2
KMHS3-20D	6	M3x0.5	6	$2H9^{+0.025}_{0}$	2	$21H9^{+0.052}_{0}$	$2H9^{+0.025}_{0}$	2
KMHS3-25D	6	M4x0.7	6	$3H9^{+0.025}_{0}$	3	$26H9^{+0.052}_{0}$	$3H9^{+0.025}_{0}$	3

三爪平行开闭气爪
3-Finger Parallel Style Air Gripper
Series KMHS3

外形尺寸图 Dimensions (mm)

Ø32~Ø80

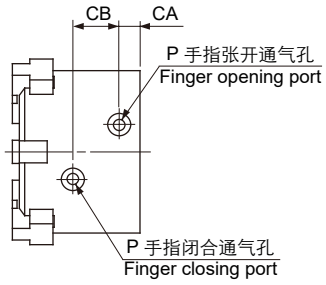

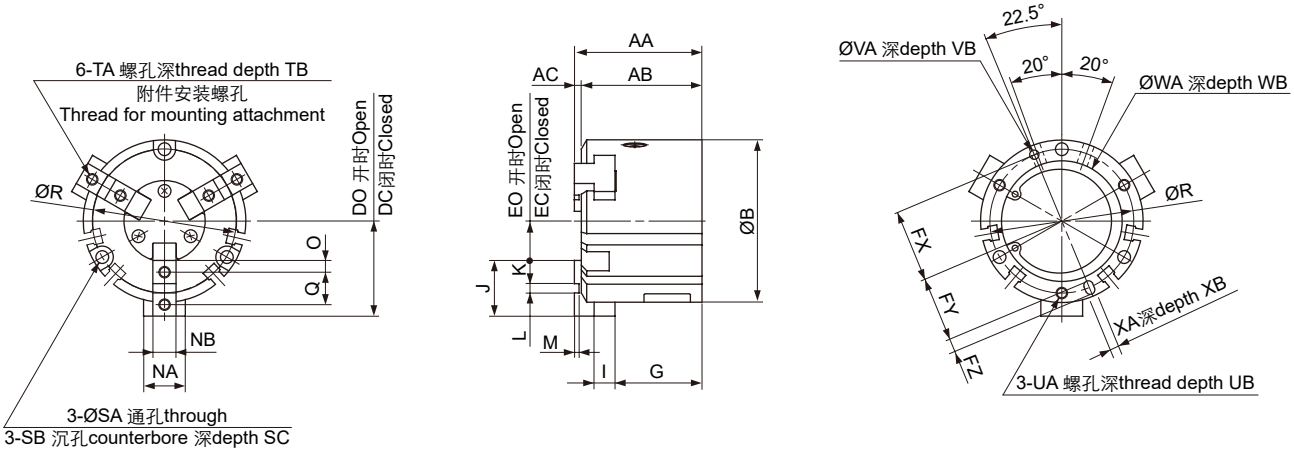

型号 Model	AA	AB	AC	B	CA	CB	DC	DO	EC	EO	FX	FY	FZ	G	I	J	K	L	M	NA	NB	O	P
KMHS3-32D	44	41	3	52	8	16	28	32	8	12	22	19.5	5	30.5	6	20	9	$2H9^{+0.025}_{0}$	2	14	$8h9^{0}_{-0.036}$	4.5	M5x0.8
KMHS3-40D	47	44	3	62	9	17	31	35	10	14	26.5	23.5	6	32	7	21	9	$3H9^{+0.025}_{0}$	2	16	$8h9^{0}_{-0.036}$	4.5	M5x0.8
KMHS3-50D	55	52	3	70	9	20	35	41	11	17	31	28	6	37.5	9	24	10	$4H9^{+0.030}_{0}$	2	18	$10h9^{0}_{-0.036}$	5	M5x0.8
KMHS3-63D	66	62	4	86	12	22	43	51	15	23	38	34.5	7	44	11	28	11	$6H9^{+0.030}_{0}$	3	24	$12h9^{0}_{-0.043}$	5.5	M5x0.8
KMHS3-80D	82	77	5	106	13.5	27	53.5	63.5	21.5	31.5	47.5	43.5	8	56	12	32	12	$8H9^{+0.036}_{0}$	4	28	$14h9^{0}_{-0.043}$	6	1/8

型号 Model	Q	R	SA	SB	SC	TA	TB	UA	UB	VA	VB	WA	WB	XA	XB
KMHS3-32D	11	44	4.5	8	9	M4x0.7	8	M4x0.7	6	$3H9^{+0.025}_{0}$	3	$34H9^{+0.062}_{0}$	2	$3H9^{+0.025}_{0}$	3
KMHS3-40D	12	53	5.5	9.5	9	M4x0.7	8	M5x0.8	7.5	$4H9^{+0.030}_{0}$	4	$42H9^{+0.062}_{0}$	2	$4H9^{+0.030}_{0}$	4
KMHS3-50D	14	62	5.5	9.5	12	M5x0.8	10	M5x0.8	10	$4H9^{+0.030}_{0}$	4	$52H9^{+0.074}_{0}$	2	$4H9^{+0.030}_{0}$	4
KMHS3-63D	17	76	6.6	11	14	M5x0.8	10	M6x1.0	9	$5H9^{+0.030}_{0}$	5	$65H9^{+0.074}_{0}$	2.5	$5H9^{+0.030}_{0}$	5
KMHS3-80D	20	95	6.6	11	19	M6x1.0	12	M6x1.0	12	$6H9^{+0.030}_{0}$	6	$82H9^{+0.087}_{0}$	3	$6H9^{+0.030}_{0}$	6

三爪平行开闭气爪
3-Finger Parallel Style Air Gripper
Series KMHS3

外形尺寸图 Dimensions (mm)

Ø100~Ø125

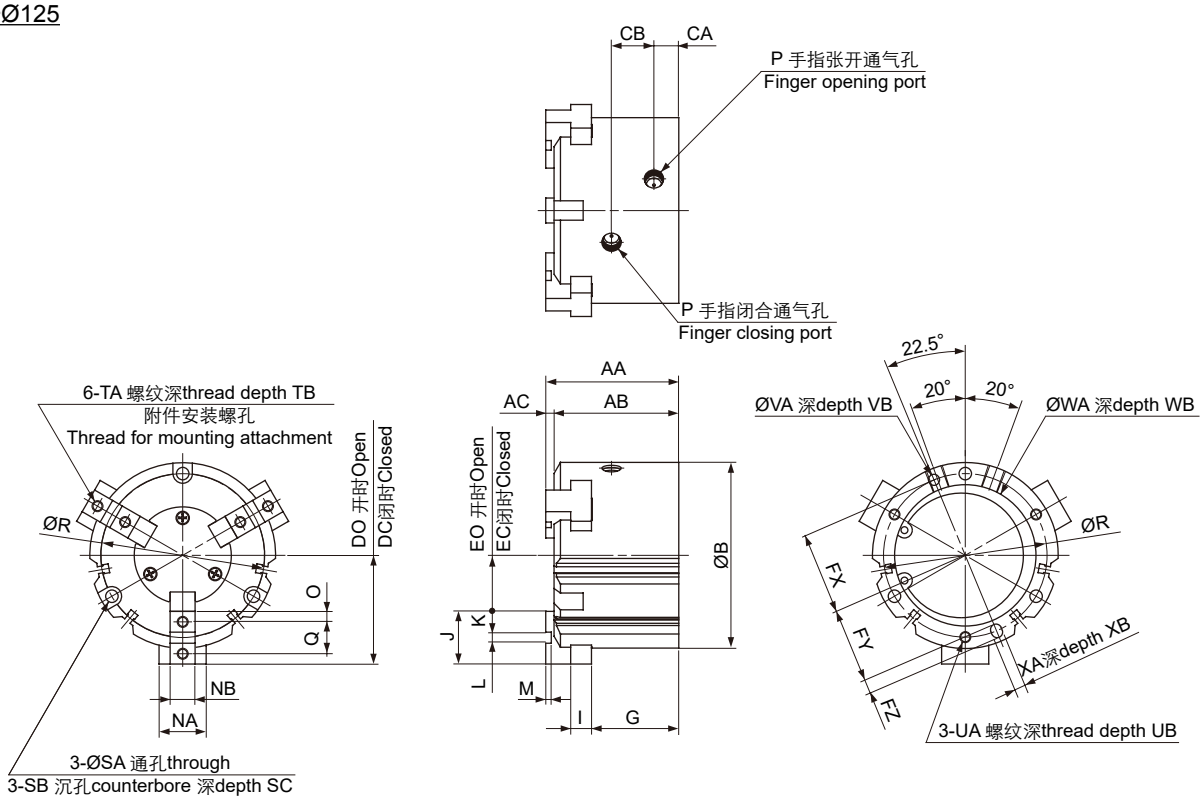

型号 Model	AA	AB	AC	B	CA	CB	DC	DO	EC	EO	FX	FY	FZ	G	I	J	K	L	M	NA	NB	O	P
KMHS3-100D	96	90	6	134	18	30.6	66	78	28	40	59	54	10	63	15	38	15	8H9 $^{+0.036}_{0}$	4	34	18h9 $^{0}_{-0.043}$	7.5	1/4
KMHS3-125D	122	114	8	166	23.5	38	82	98	30	46	74	68	12	84	18	52	21	10H9 $^{+0.036}_{0}$	6	40	22h9 $^{0}_{-0.052}$	10.5	3/8

型号 Model	Q	R	SA	SB	SC	TA	TB	UA	UB	VA	VB	WA	WB	XA	XB
KMHS3-100D	23	118	9	14	21	M8x1.25	16	M8x1.25	16	8H9 $^{+0.036}_{0}$	6	102H9 $^{+0.087}_{0}$	4	8H9 $^{+0.036}_{0}$	6
KMHS3-125D	31	148	11	17.5	34	M10x1.5	20	M10x1.5	20	10H9 $^{+0.036}_{0}$	8	130H9 $^{+0.1}_{0}$	6	10H9 $^{+0.036}_{0}$	8

3

端板安装部分尺寸图 Mounting portion of end plate

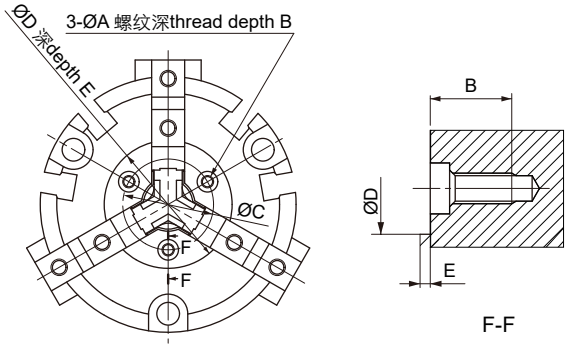

型号 Model	A	B	C	D	E
KMHS3-16D	M2x0.4	5.5	12.5	18H8 $^{+0.027}_{0}$	0.5
KMHS3-20D		5.4	15	21H8 $^{+0.033}_{0}$	0.6
KMHS3-25D			17	23H8 $^{+0.033}_{0}$	
KMHS3-32D		5.2	21	27H8 $^{+0.033}_{0}$	0.8
KMHS3-40D	M3x0.5	8	22	31H8 $^{+0.039}_{0}$	1
KMHS3-50D			26	35H8 $^{+0.039}_{0}$	
KMHS3-63D			33	42H8 $^{+0.039}_{0}$	
KMHS3-80D	M4x0.7	9.5	40	52H8 $^{+0.046}_{0}$	1.5
KMHS3-100D			54	70H8 $^{+0.046}_{0}$	
KMHS3-125D			62	82H8 $^{+0.054}_{0}$	

ARK

宽型气爪
Wide Opening Air Gripper
Series KMHL2 (Ø10~Ø40)

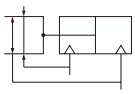

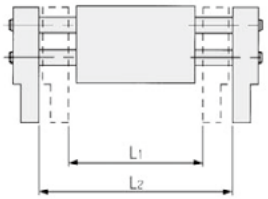

规格 Specifications

缸径 Bore size (mm)	10			16			20			25			32			40		
接管口径 Port size Rc(PT)	M5x0.8												1/8					
使用流体 Fluid	过滤压缩空气 Filtered compressed air																	
动作形式 Action	双动 Double acting																	
使用压力范围 Operating pressure range (MPa)	0.15~0.6			0.1~0.6														
环境及流体温度 Ambient and fluid temperature	-5~60℃ (未冻结 No freezing)																	
*1) 有效夹持力 Effective gripping force (0.5 MPa) (N)	14			45			74			131			228			396		
开闭行程 Opening/ closing stroke (L2-L1) (mm)	20	40	60	30	60	80	40	80	100	50	100	120	70	120	160	100	160	200
闭合宽度 Closed width (L1) (mm)	56	78	96	68	110	130	82	142	162	100	182	200	150	198	242	188	246	286
打开宽度 Open width (L2) (mm)	76	118	156	98	170	210	122	222	262	150	282	320	220	318	402	288	406	486
最高动作频率 Max. opening frequency (c.p.m)	60	40	40	60	40	40	60	40	40	60	40	40	30	20	20	30	20	20
*2) 润滑 Lubrication	不需要 Not required																	
重复精度 Repeatability (mm)	±0.01																	
磁性开关 / 开关固定码 Auto switch/ Switch clamp	D-M9BK/ PS																	

*1) 夹持点距离 L=40mm (Ø10~Ø25), L=80mm (Ø32, Ø40) 时的数值。
Values for when L=40mm (Ø10~Ø25), L=80mm (Ø32, Ø40).
2) 如需要润滑请使用透平 1 号油 ISOVG32。Please use Turbine oil 1st Grade ISOVG32 if necessary.

型号表示方法 How to Order

KMHL2 - 1 6 D [ ]

缸径
Bore size

动作形式 Action

D	双动 Double acting

行程 Stroke (mm)

缸径 Bore size	10	16	20	25	32	40
-	20	30	40	50	70	100
1	40	60	80	100	120	160
2	60	80	100	120	160	200

宽型气爪
Wide Opening Air Gripper
Series KMHL2

外形尺寸图 Dimensions (mm)

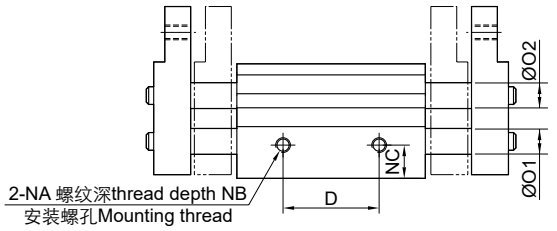

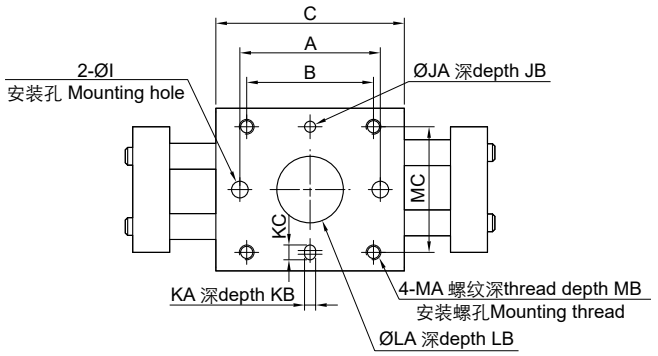

型号 Model	A	B	C	D	E	F	G	H
KMHL2-10D	38	36	51	26	56	76	100	24
KMHL2-10D1	54	52	67	42	78	118	142	39
KMHL2-10D2	72	70	85	60	96	156	180	57
KMHL2-16D	40	45	60	28	68	98	128	26
KMHL2-16D1	70	75	90	58	110	170	200	50
KMHL2-16D2	90	95	110	78	130	210	240	70
KMHL2-20D	54	58	71	38	82	122	160	32
KMHL2-20D1	96	100	113	80	142	222	260	68
KMHL2-20D2	116	120	133	100	162	262	300	88
KMHL2-25D	66	70	88	48	100	150	196	38
KMHL2-25D1	120	124	142	102	182	282	328	86
KMHL2-25D2	138	142	160	120	200	320	366	104
KMHL2-32D	-	86	110	60	150	220	272	56
KMHL2-32D1	-	134	158	108	198	318	370	104
KMHL2-32D2	-	178	202	152	242	402	454	148
KMHL2-40D	-	116	148	80	188	288	348	72
KMHL2-40D1	-	174	206	138	246	406	466	130
KMHL2-40D2	-	214	246	178	286	486	546	170

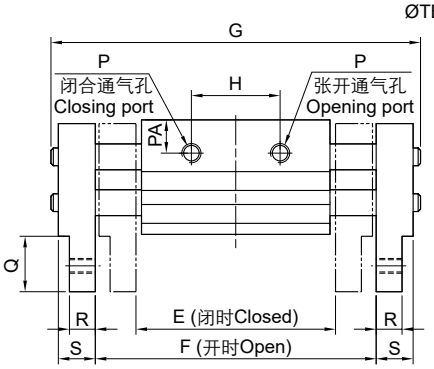

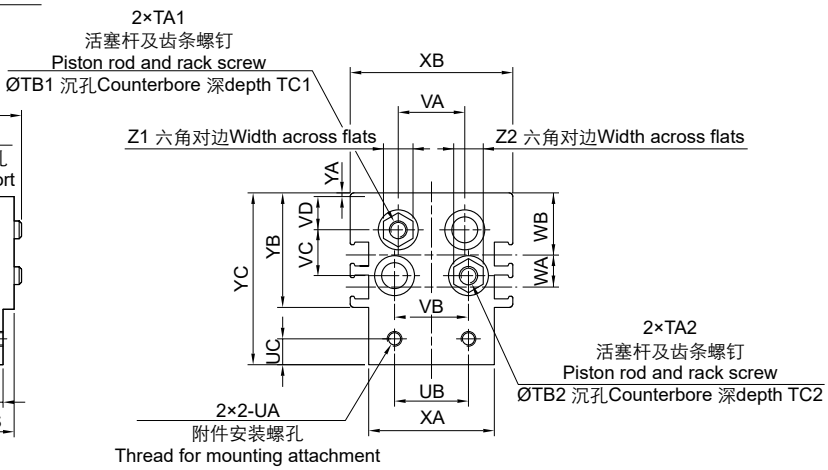

型号 Model	I	JA	JB	KA	KB	KC	LA	LB	MA	MB	MC	NA	NB	NC	O1	O2	P	PA	Q	R	S
KMHL2-10D	4.5	3H9 $^{+0.025}_{0}$	3	3H9 $^{+0.025}_{0}$	3	4	18H9 $^{+0.043}_{0}$	1.5	M4x0.7	8	34	M4x0.7	5	9	6	6	M5x0.8	9	15	7	10
KMHL2-16D	5.5	3H9 $^{+0.025}_{0}$	3	3H9 $^{+0.025}_{0}$	3	4	23H9 $^{+0.052}_{0}$	1.5	M5x0.8	10	42	M5x0.8	7	10	8	8	M5x0.8	10	19	9	13
KMHL2-20D	6.6	4H9 $^{+0.030}_{0}$	4	4H9 $^{+0.030}_{0}$	4	5	27H9 $^{+0.052}_{0}$	1.5	M6x1.0	12	52	M6x1.0	7	11	10	10	M5x0.8	11	24	12.5	17
KMHL2-25D	9	4H9 $^{+0.030}_{0}$	4.5	4H9 $^{+0.030}_{0}$	4.5	5	32H9 $^{+0.052}_{0}$	1.5	M8x1.25	16	62	M8x1.25	7	12.5	12	12	M5x0.8	16	29	14	21
KMHL2-32D	-	6H9 $^{+0.030}_{0}$	8	6H9 $^{+0.030}_{0}$	8	7	35H9 $^{+0.062}_{0}$	2.5	M8x1.25	16	64	M8x1.25	11	22	14	16	1/8	16	32	15	24
KMHL2-40D	-	6H9 $^{+0.030}_{0}$	8	6H9 $^{+0.030}_{0}$	8	7	40H9 $^{+0.062}_{0}$	2.5	M10x1.5	20	76	M10x1.5	12	28	16	20	1/8	18	38	18	24

型号 Model	TA1	TA2	TB1	TB2	TC1	TC2	UA	UB	UC	VA	VB	VC	VD	WA	WB	XA	XB	YA	YB	YC	Z1	Z2
KMHL2-10D	M5x0.8	M5x0.8	12.4	12.4	5.5	5.5	M4x0.7	20	7	18.2	20	12.5	8	8.4	16.8	34	44	0.5	31	46	8	8
KMHL2-16D	M6x1.0	M6x1.0	15	15	6.5	6.5	M5x0.8	25	8	22.6	25	16.5	9	11	20.5	43	55	0.5	39	58	10	10
KMHL2-20D	M6x1.0	M6x1.0	15	15	6.5	6.5	M6x1.0	30	10	28.2	30	20	10	14	24	54	65	1	46	70	10	10
KMHL2-25D	M8x1.25	M8x1.25	18.5	18.5	6.5	6.5	M8x1.25	40	12	33.2	38	23.5	11.5	18	27	64	76	1	52	81	13	13
KMHL2-32D	M10x1.5	M10x1.5	26	26	11	11	M10x1.5	50	15	32.2	40	30	14.5	26	32.5	70	82	1	68	100	17	17
KMHL2-40D	M10x1.5	M12x1.75	26	28	11	11	M12x1.75	60	18	40.2	48	37	16	30	39	86	98	1	79	117	17	19

ARK 薄型气爪

Low Profile Air Gripper

Series KMHF2 (Ø8~Ø20)

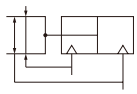

规格 Specifications

缸径 Bore size (mm)	8			12			16			20		
接管口径 Port size Rc(PT)	M3x0.5			M5x0.8								
使用流体 Fluid	过滤压缩空气 Filtered compressed air											
动作形式 Action	双动 Double acting											
使用压力范围 Operating pressure range (MPa)	0.15~0.7			0.1~0.7								
环境及流体温度 Ambient and fluid temperature	-5~60℃ (未冻结 No freezing)											
*1) 有效夹持力 Effective gripping force (0.5 MPa) (N)	19			48			90			141		
开闭行程 Opening/ closing stroke (mm)	-D	-D1	-D2	-D	-D1	-D2	-D	-D1	-D2	-D	-D1	-D2
	8	16	32	12	24	48	16	32	64	20	40	80
最高动作频率 Max. opening frequency (c.p.m)	120	120	60	120	120	60	120	120	60	120	120	60
*2) 润滑 Lubrication	不需要 Not required											
重复精度 Repeatability (mm)	*3)±0.05											
磁性开关 Auto switch	D-M9BK											

*1) 夹持点距离 L=20mm 时的数值。Values for when L=20 mm.
2) 如需要润滑请使用透平 1 号油 ISOVG32。Please use Turbine oil 1st Grade ISOVG32 if necessary.
3) 为卡爪无偏载情况下的数值，卡爪如有偏载重复精度最大值为± 0.15mm。The Value when no offset load is applied. When offset load is applied to the finger, the maximum value is ± 0.15 mm.

型号表示方法 How to Order

KMHF2 - 12 D 1 [ ]

缸径
Bore size

动作形式 Action

D	双动 Double acting

行程 Stroke

-	短行程 Short stroke
1	中行程 Medium stroke
2	长行程 Long stroke

配管类型
Piping type

-	轴向配管 Axial piping
R	侧面配管 Side piping

3

外形尺寸图 Dimensions (mm)

KMHF2-8D

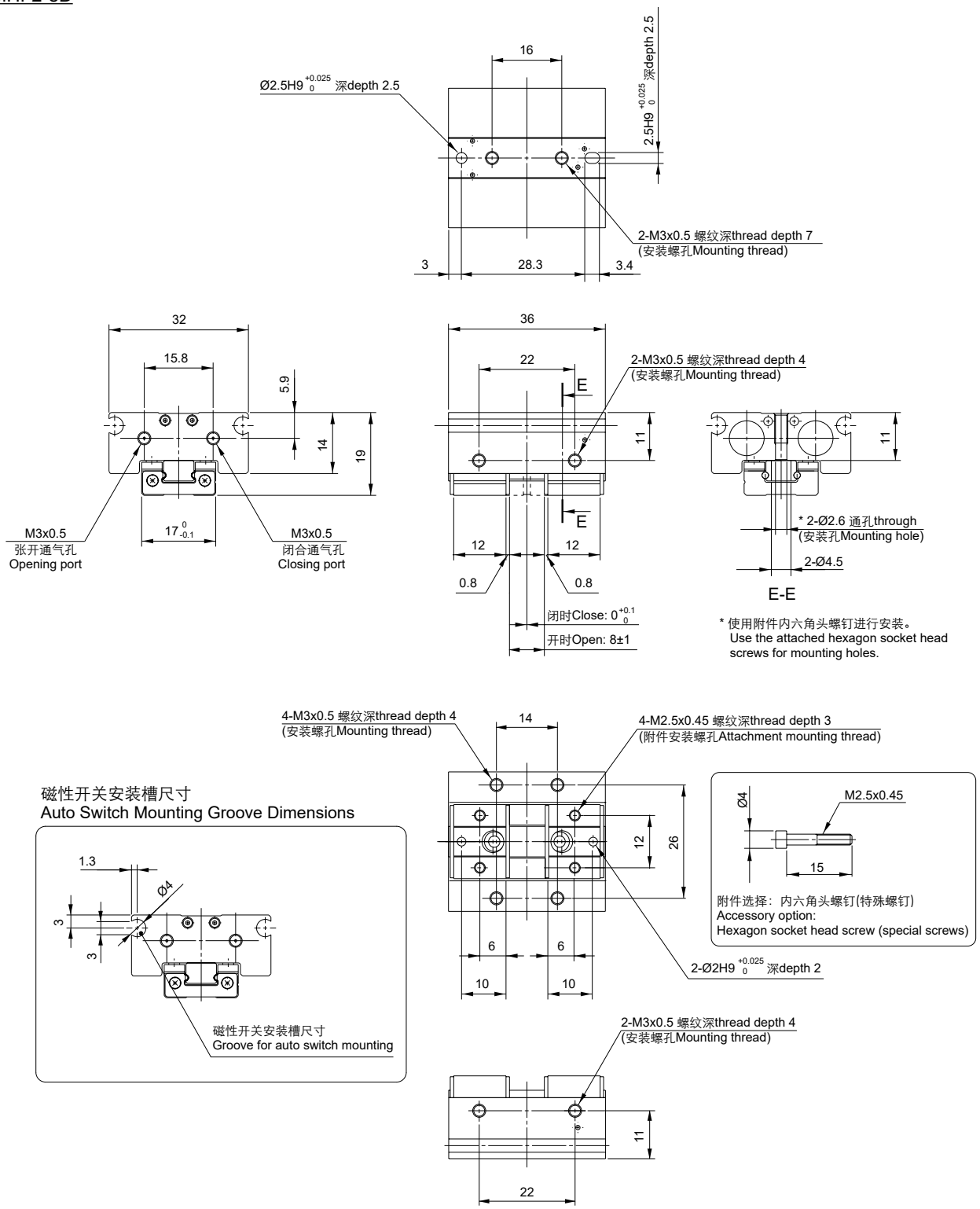

3

外形尺寸图 Dimensions (mm)

KMHF2-8D1

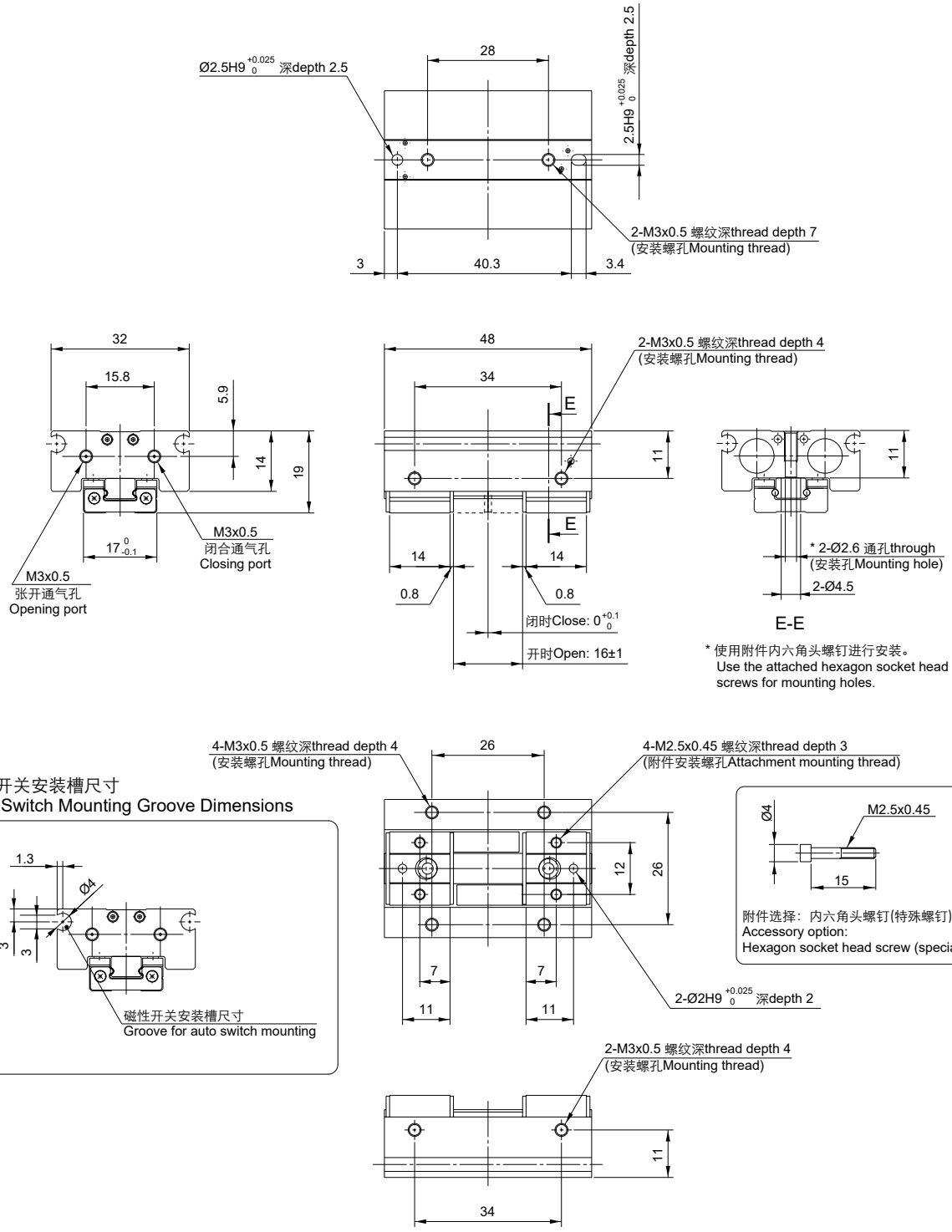

外形尺寸图 Dimensions (mm)

KMHF2-8D2

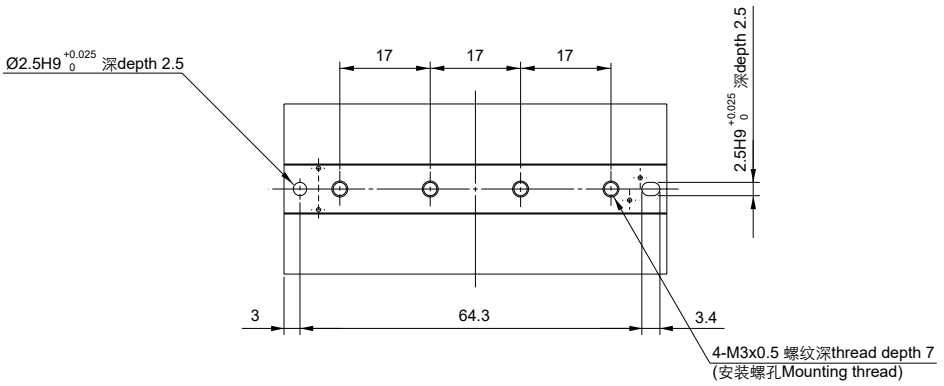

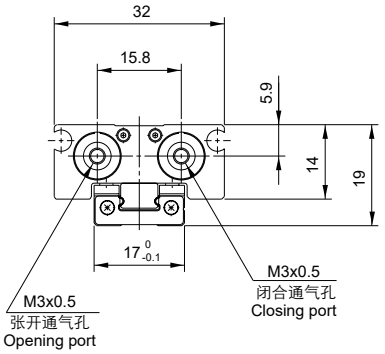

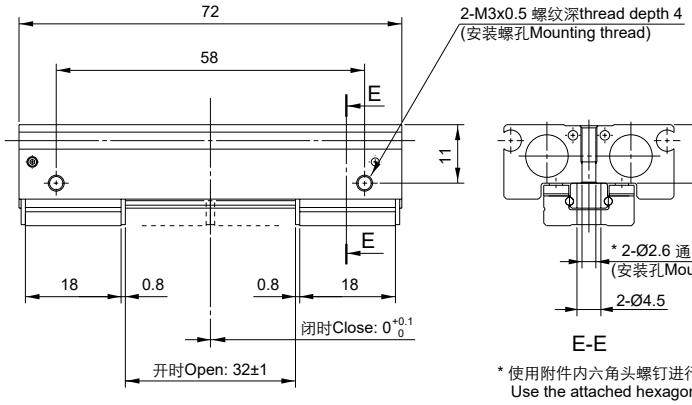

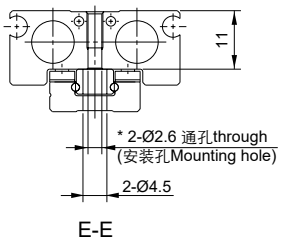

* 使用附件内六角头螺钉进行安装。
Use the attached hexagon socket head screws for mounting holes.

磁性开关安装槽尺寸
Auto Switch Mounting Groove Dimensions

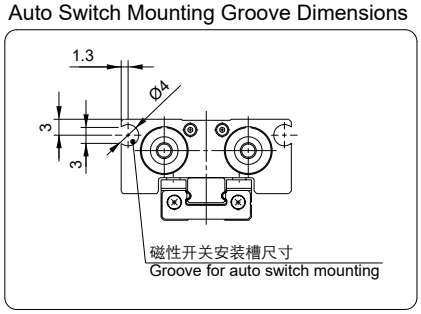

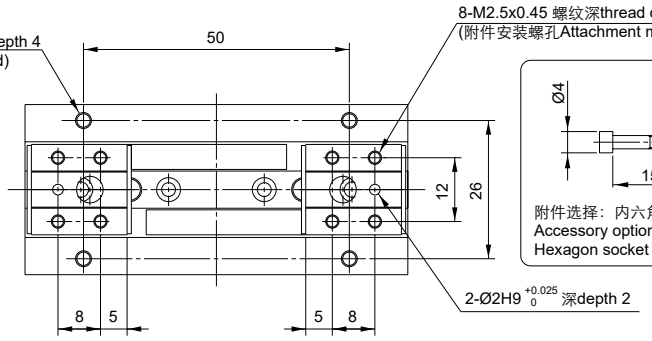

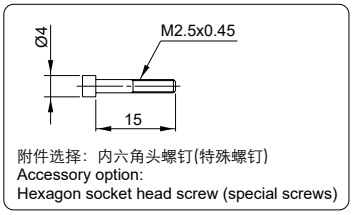

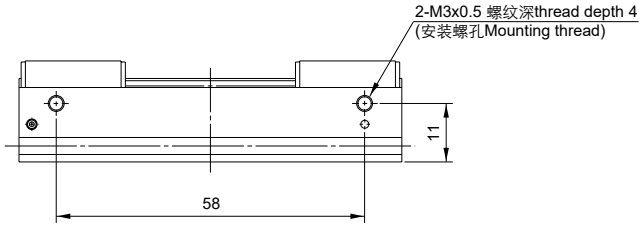

薄型气爪
Low Profile Air Gripper
Series KMHF2

外形尺寸图 Dimensions (mm)

KMHF2-12D

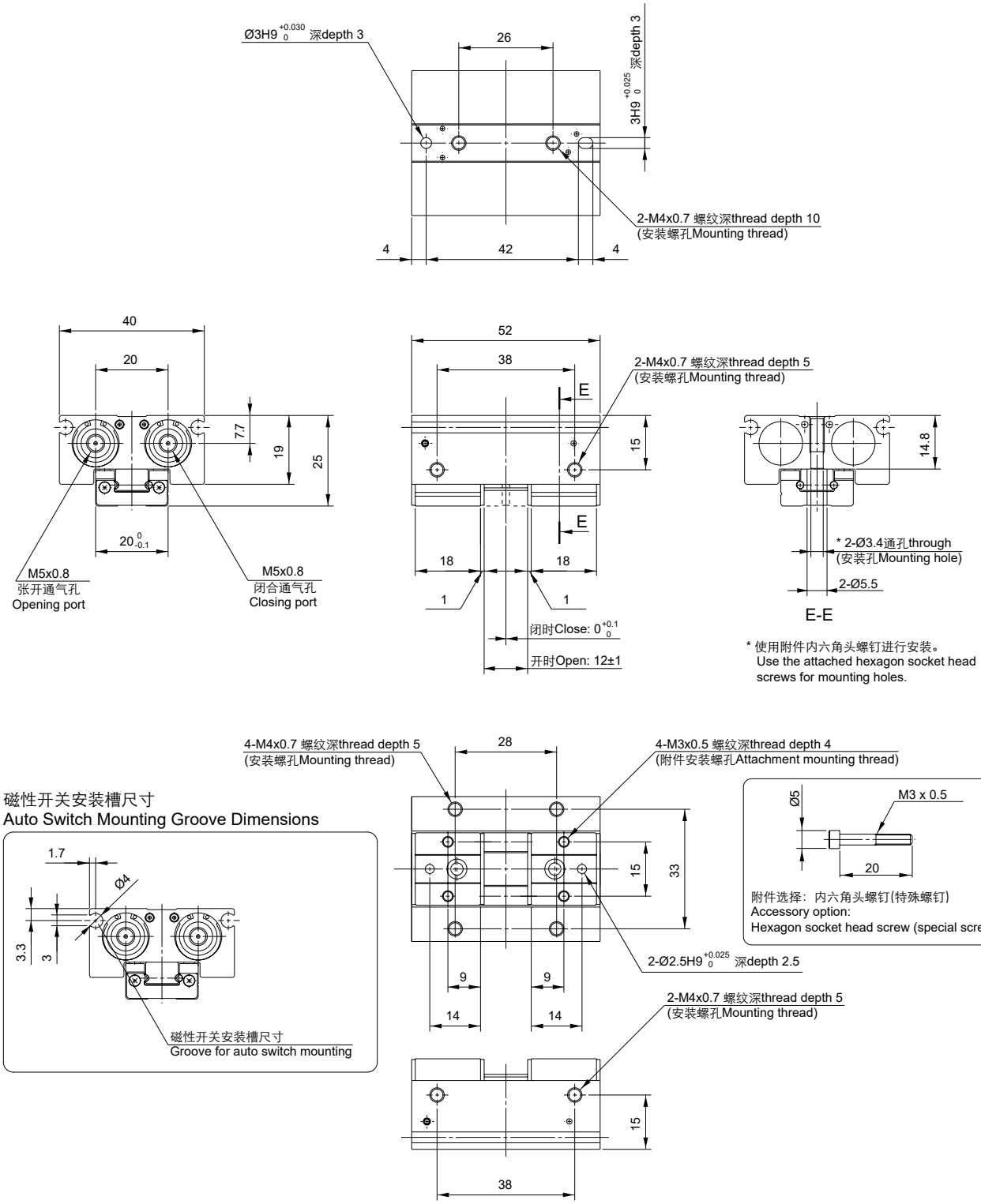

3

外形尺寸图 Dimensions (mm)

KMHF2-12D1

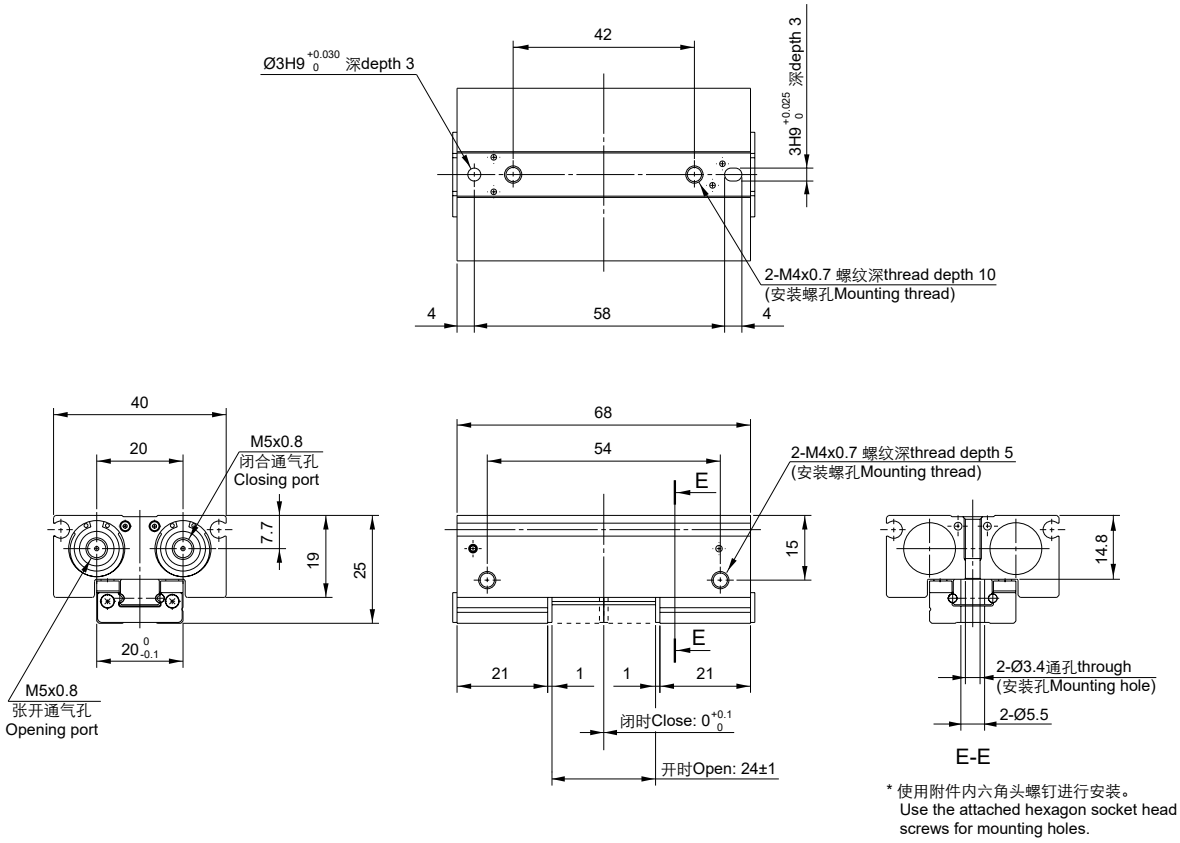

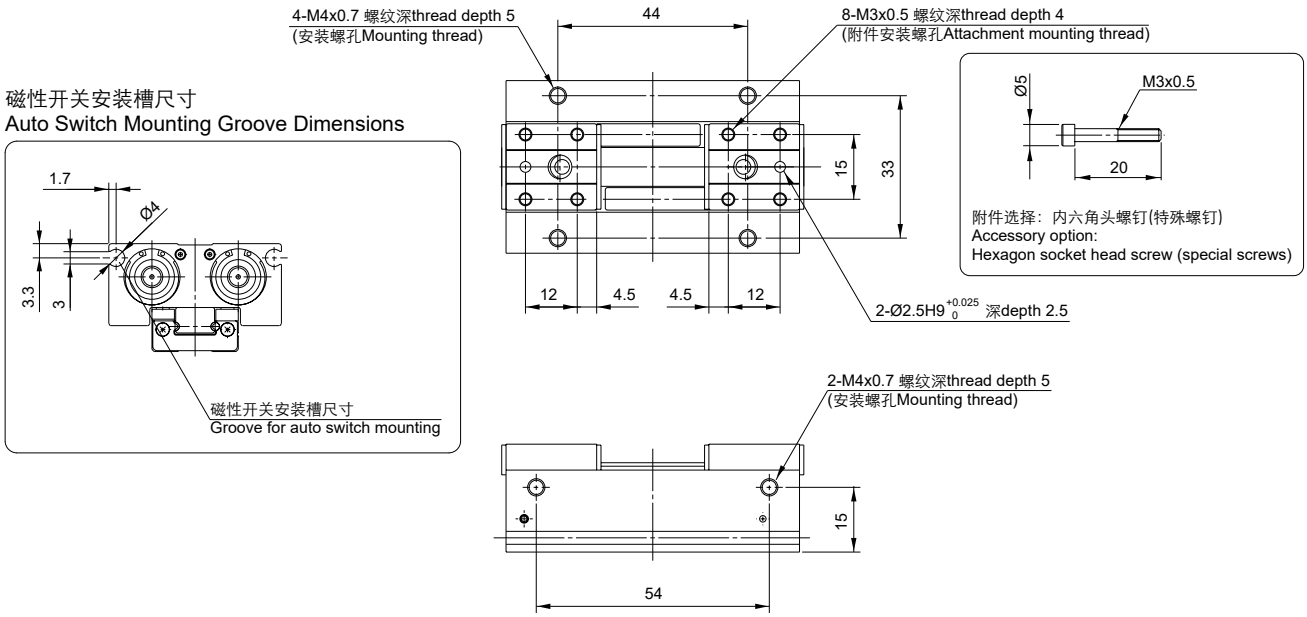

薄型气爪
Low Profile Air Gripper
Series KMHF2

外形尺寸图 Dimensions (mm)

KMHF2-12D2

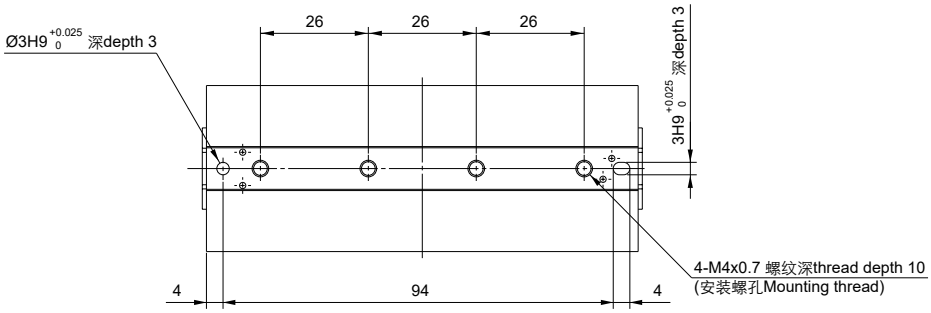

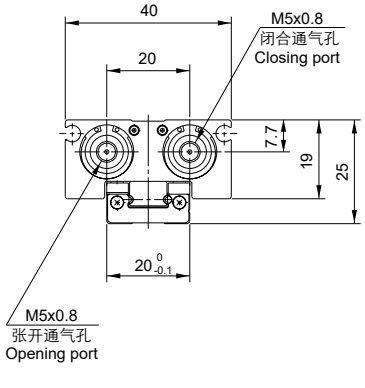

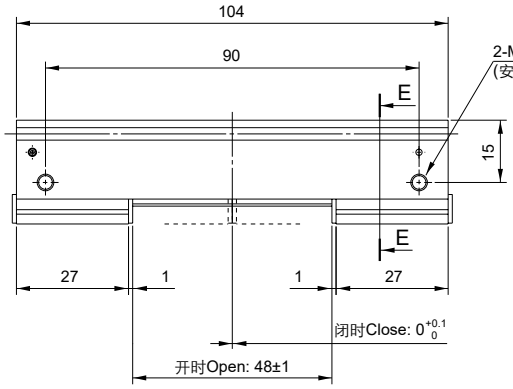

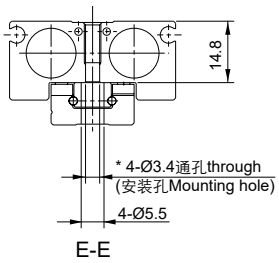

* 使用附件内六角头螺钉进行安装。
Use the attached hexagon socket head screws for mounting holes.

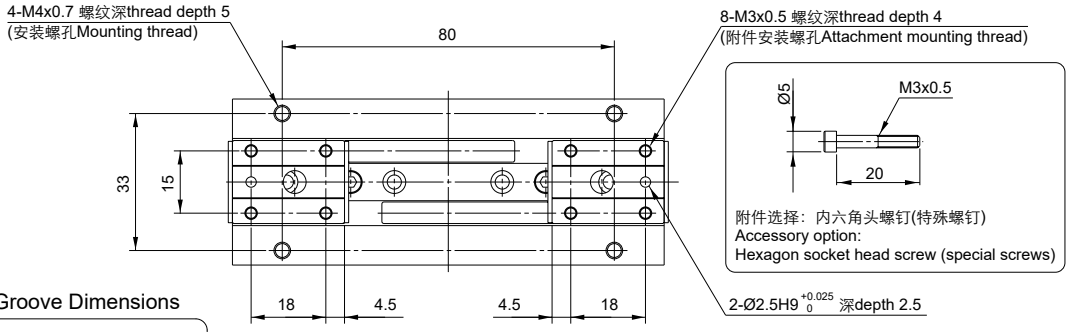

磁性开关安装槽尺寸
Auto Switch Mounting Groove Dimensions

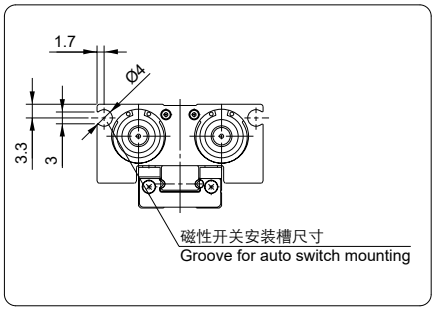

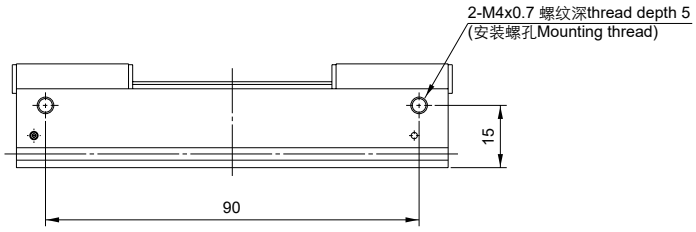

3

外形尺寸图 Dimensions (mm)

KMHF2-16D

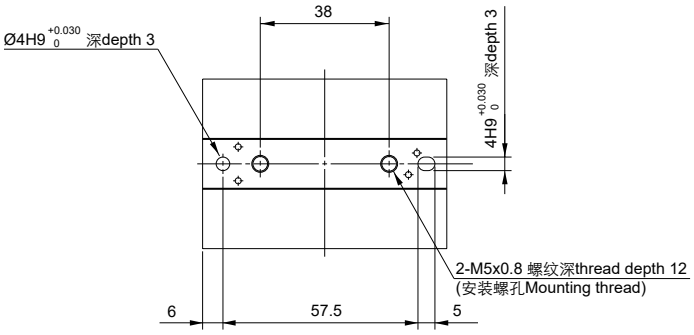

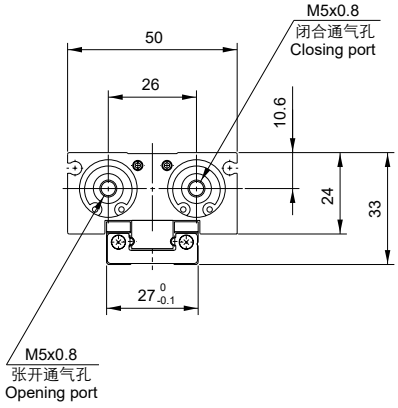

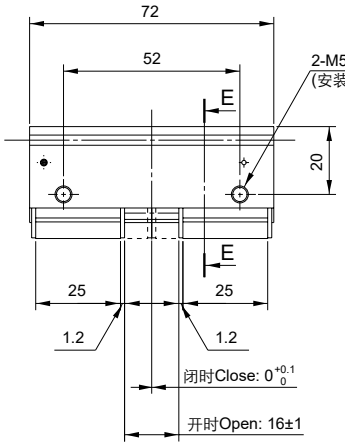

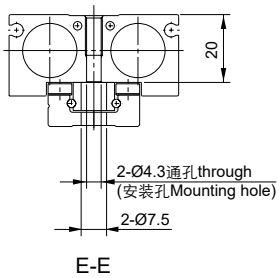

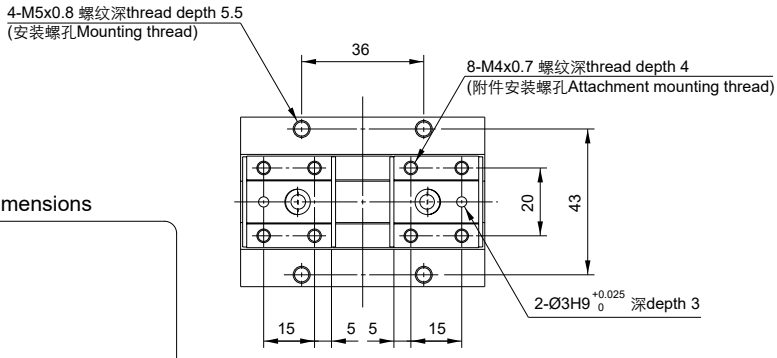

磁性开关安装槽尺寸
Auto Switch Mounting Groove Dimensions

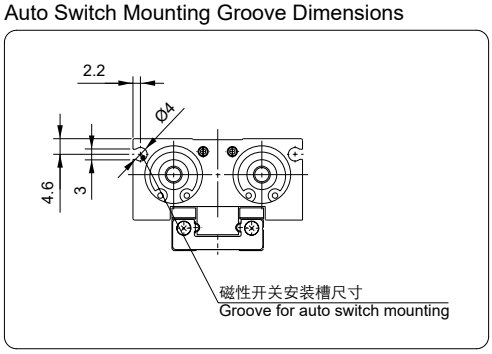

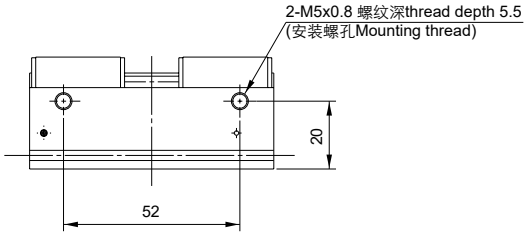

外形尺寸图 Dimensions (mm)

KMHF2-16D1

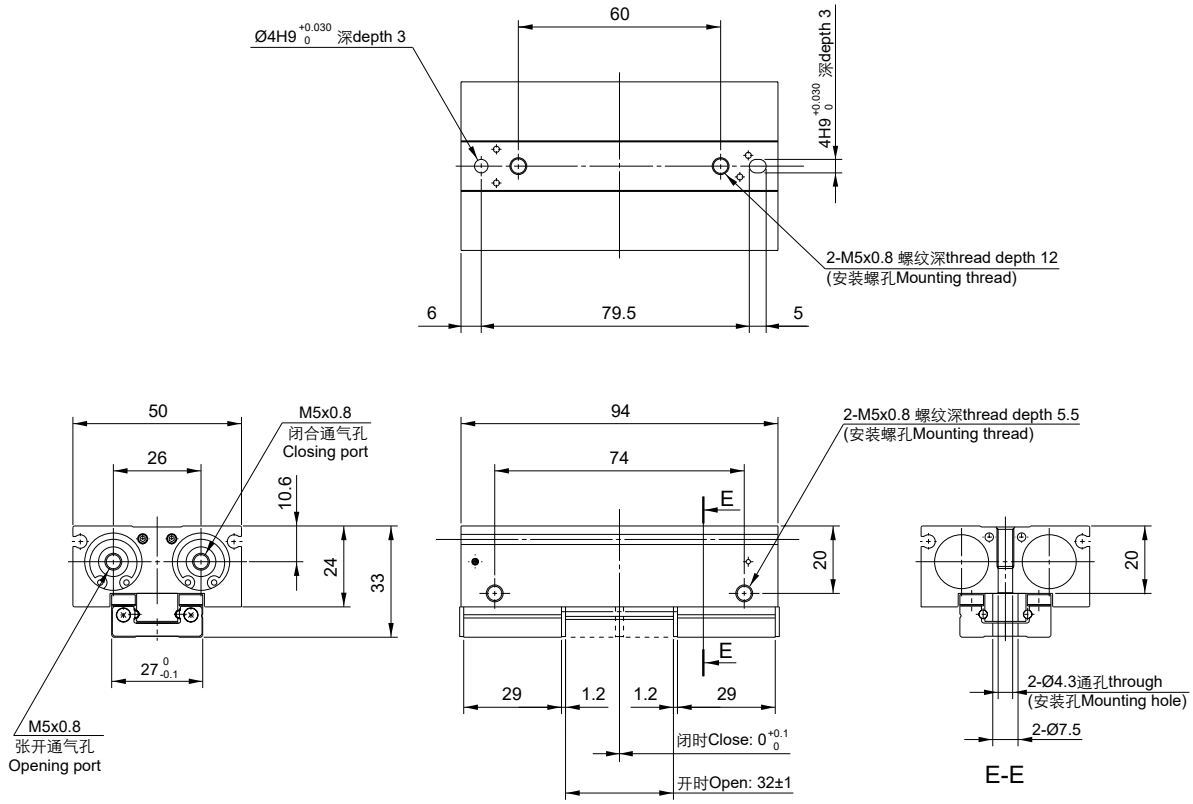

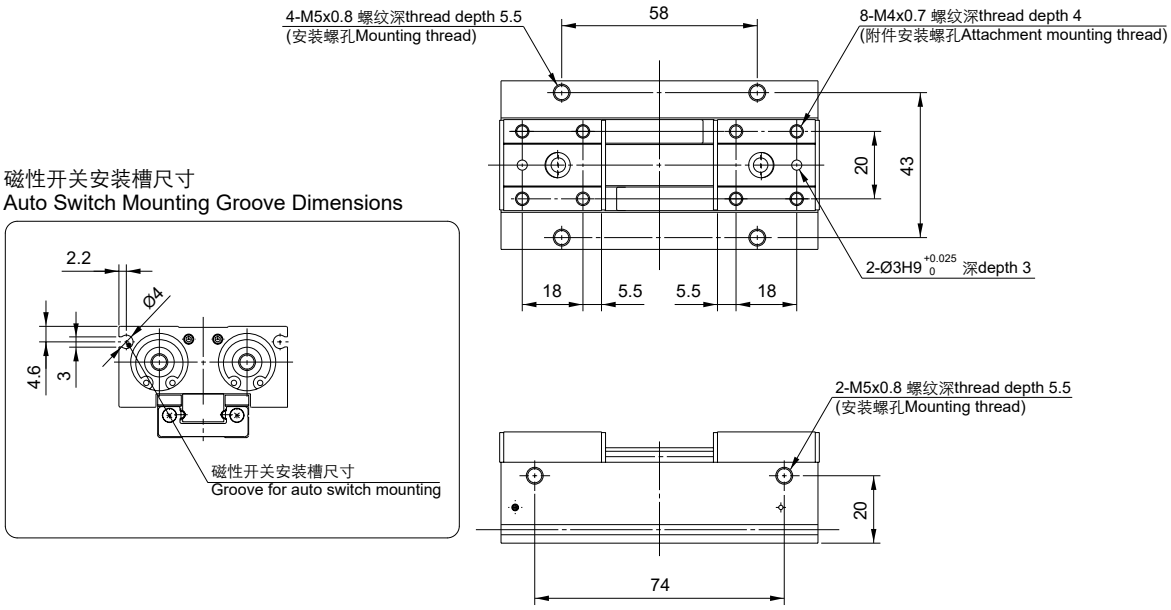

3

薄型气爪
Low Profile Air Gripper
Series KMHF2

外形尺寸图 Dimensions (mm)

KMHF2-16D2

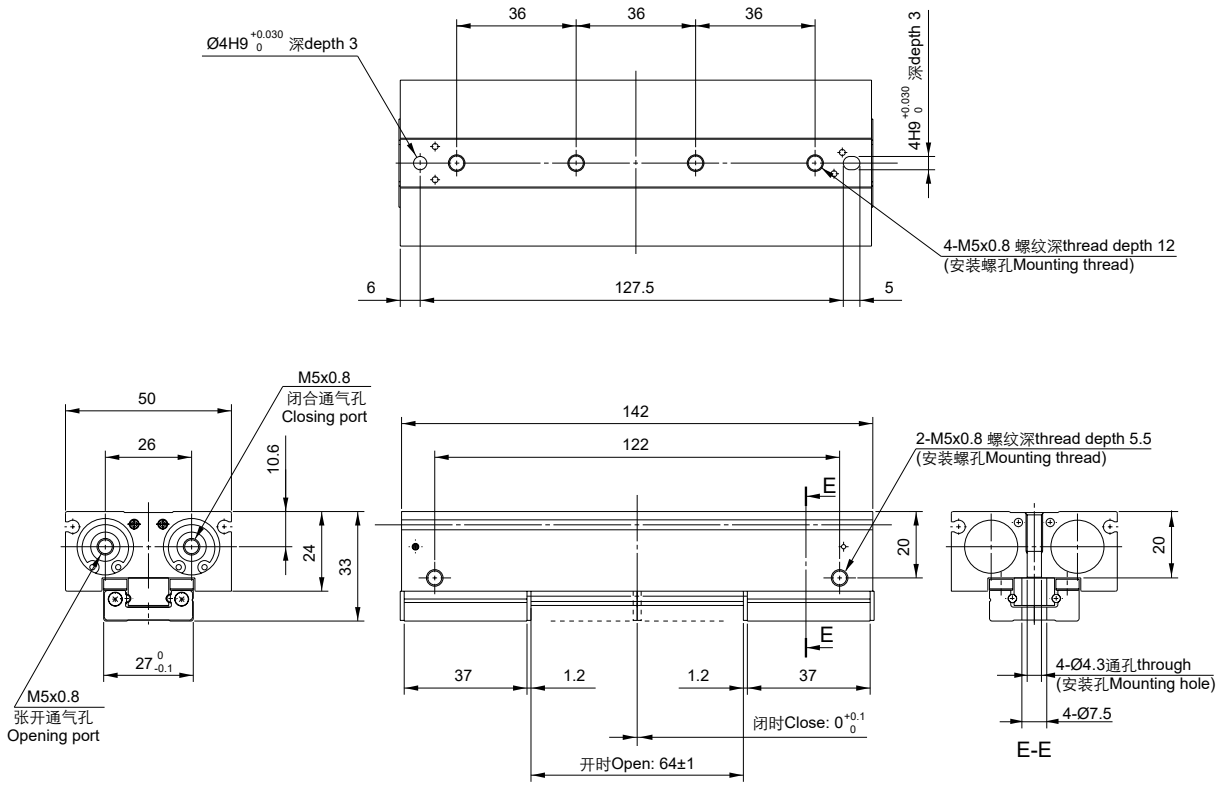

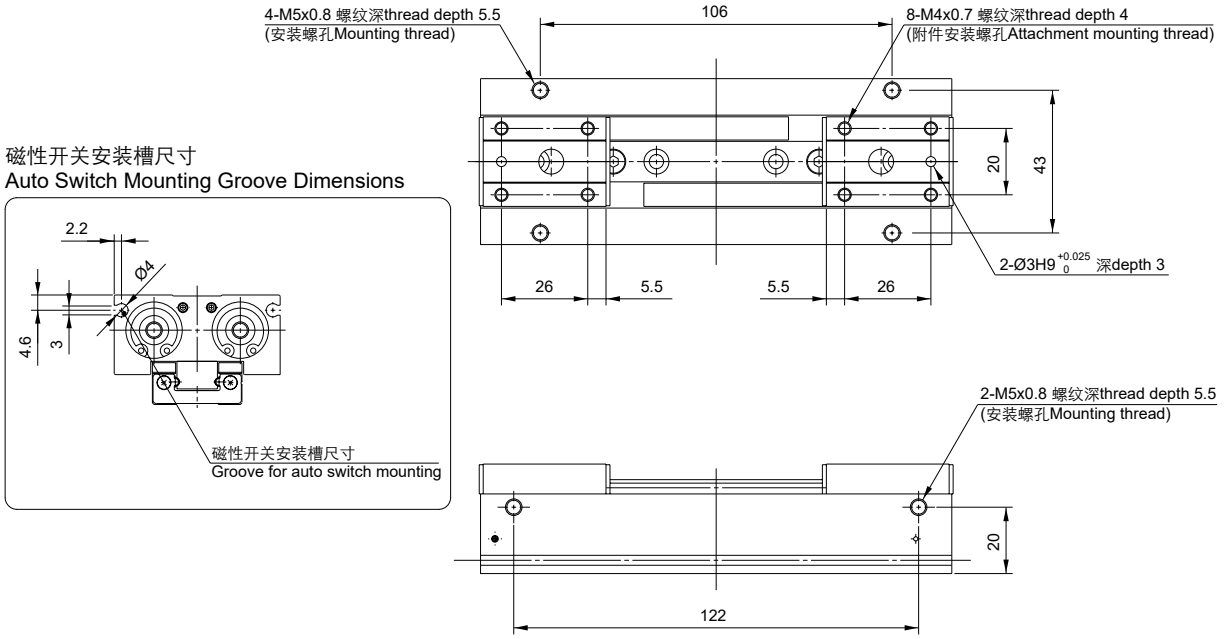

3

薄型气爪
Low Profile Air Gripper
Series KMHF2

外形尺寸图 Dimensions (mm)

KMHF2-20D

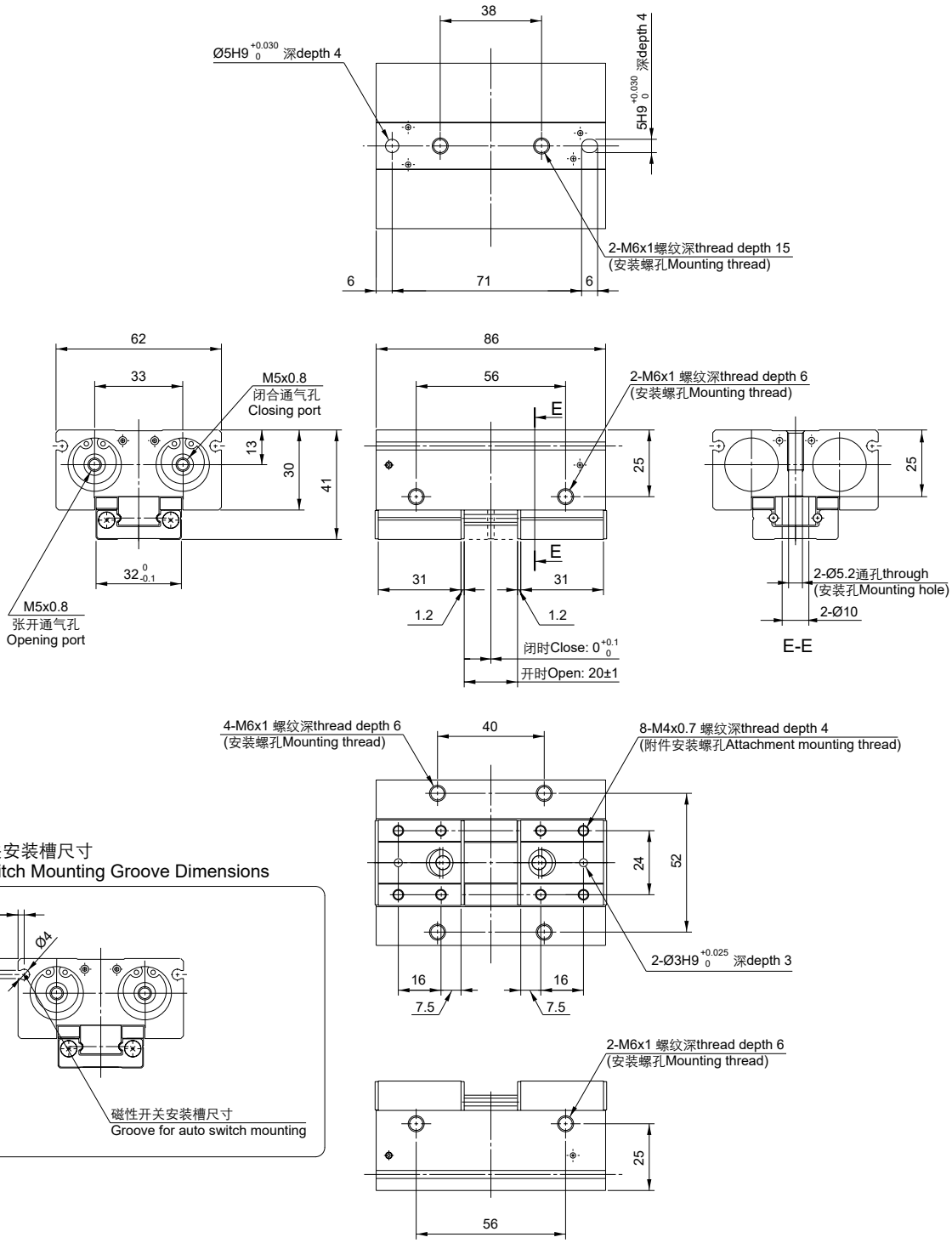

3

薄型气爪
Low Profile Air Gripper
Series KMHF2

外形尺寸图 Dimensions (mm)

KMHF2-20D1

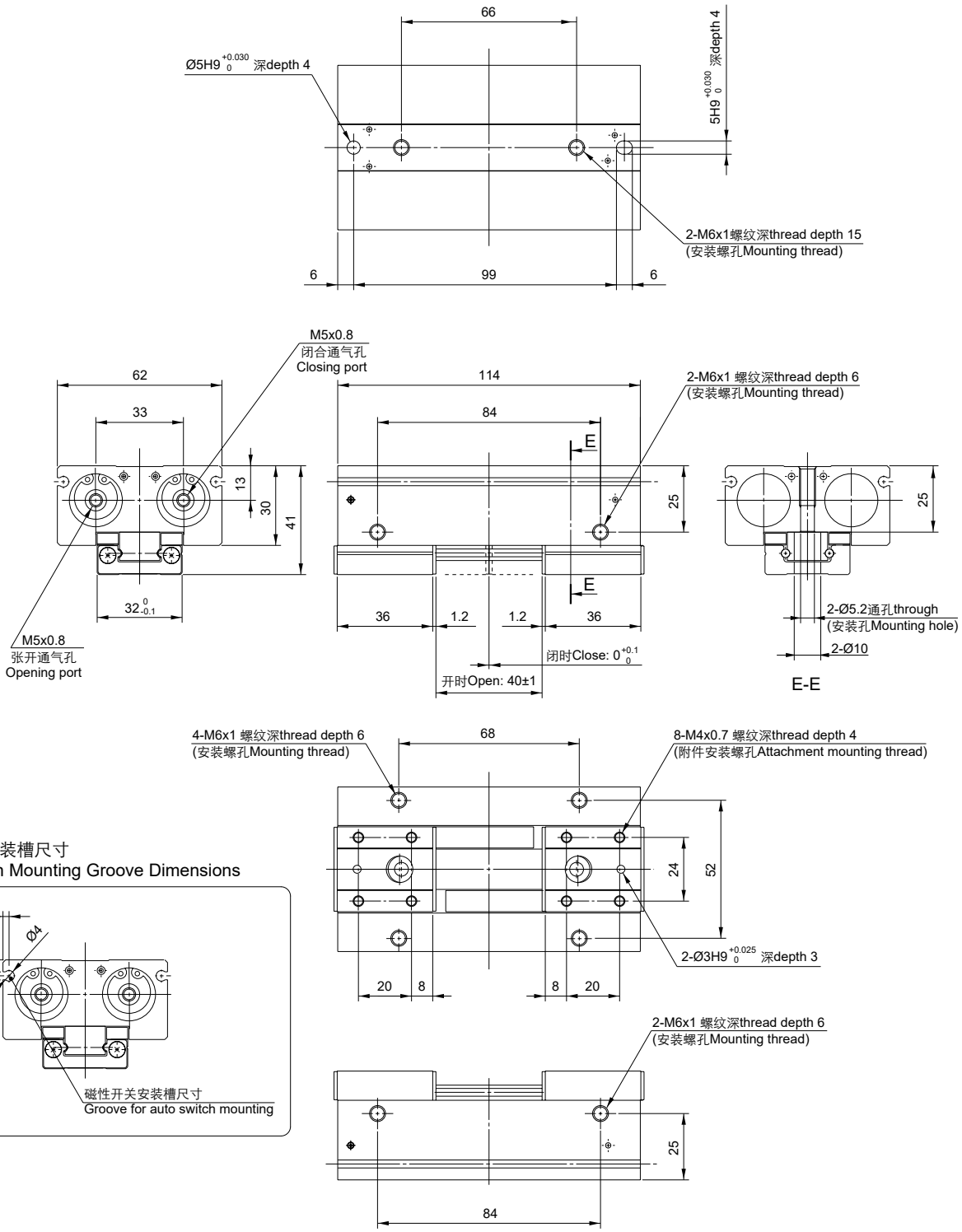

3

薄型气爪
Low Profile Air Gripper
Series KMHF2

外形尺寸图 Dimensions (mm)

KMHF2-20D2

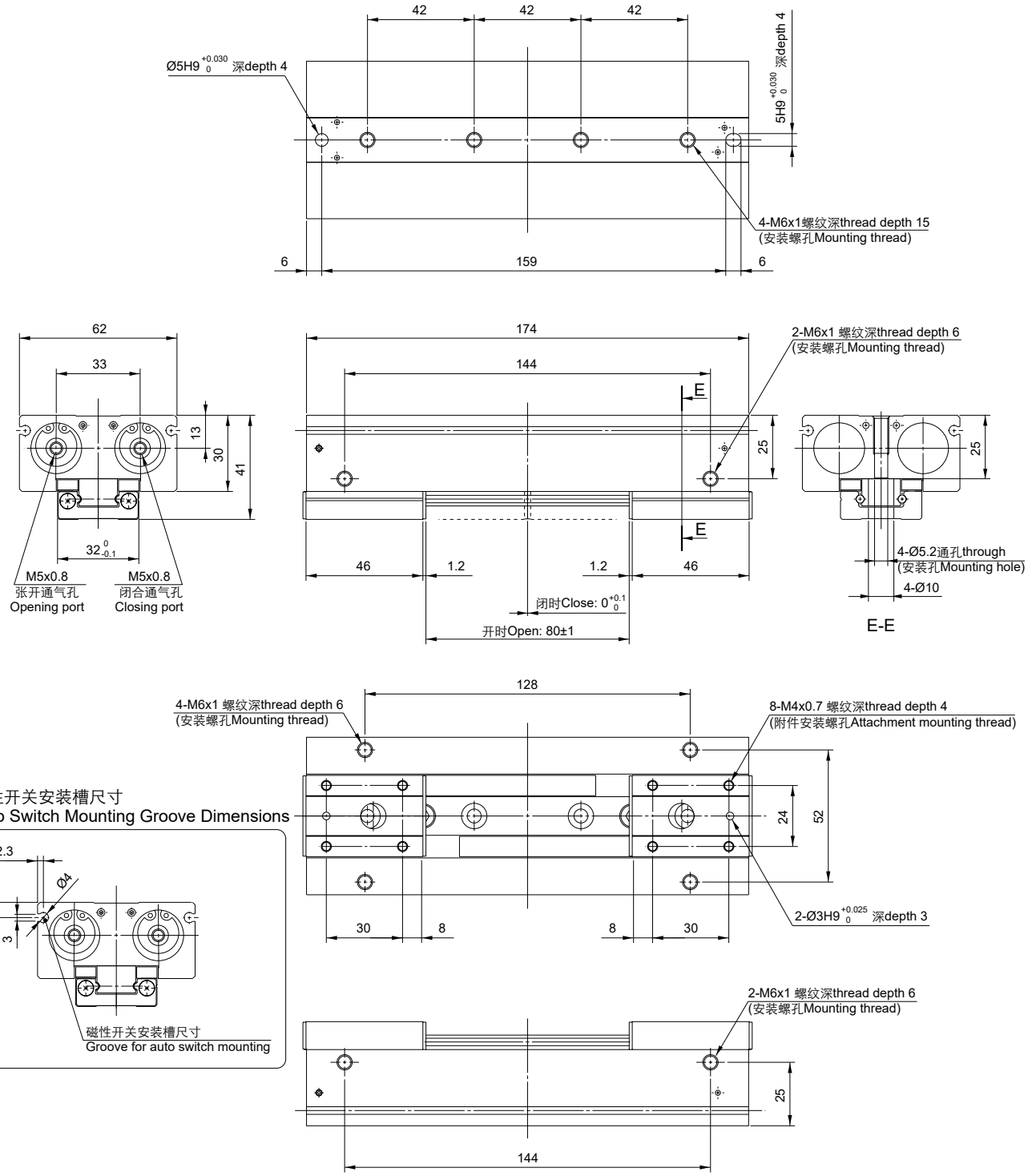

3

ARK 鱼眼接头
Female Rod Ends Joint
Series PHS

特性 Features

- 杆端为右旋 (PHS) 或左旋 (PHSL) 的内螺纹连接。
  Right-hand (PHS) or left hand (PHSL) female thread connection at rod end.
- 外圈球面镶青铜衬垫。
  Outer race lined with bronze liner.
- 杆端体表面镀锌，有润滑油孔或注油嘴。
  Surface of rod body zinc plated, rod body with a lubricating hole or grease nipple.

型号表示方法 How to Order

PHS 25 - M24x2.0

型号
Model

外形尺寸图 Dimensions (mm)

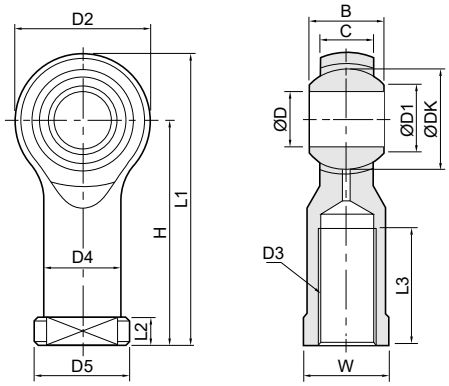

型号 Model	B	C	D	D1	D2	D3	D4	D5	DK	H	L1	L2	L3	W	负荷 Load (KN)	
															动态 Dynamic	静态 Static
PHS 4-M4x0.7	7	5.25	4	6.5	16	M4×0.7	8	9.5	9.525	24	31	4	8	8	3.0	5.0
PHS 5-M5x0.8	8	6	5	7.70	18	M5×0.8	8.5	11	11.11	27	35	4	10	9	3.25	5.70
PHS 6-M6x1.0	9	6.75	6	8.96	20	M6×1.0	10	13	12.70	30	39	5	12	11	4.3	7.20
PHS 8-M8x1.25	12	9	8	10.4	24	M8×1.25	12.5	16	15.875	36	47	5	16	14	7.2	11.6
PHS 10-M10x1.5	14	10.5	10	12.9	28	M10×1.5	15	19	19.05	43	56	6.5	20	17	10	14.5
PHS 10-M10x1.25	14	10.5	10	12.9	28	M10×1.25	15	19	19.05	43	56	6.5	20	17	10	14.5
PHS 12-M12x1.75	16	12	12	15.4	32	M12×1.75	17.5	22	22.225	50	65	6.5	22	19	13.4	17
PHS 12-M12x1.25	16	12	12	15.4	32	M12×1.25	17.5	22	22.225	50	65	6.5	22	19	13.4	17
PHS 14-M14x2.0	19	13.5	14	16.9	36	M14×2.0	20	25	25.40	57	74	8	25	22	17	24
PHS 14-M14x1.5	19	13.5	14	16.9	36	M14×1.5	20	25	25.40	57	74	8	25	22	17	24
PHS 16-M16x2.0	21	15	16	19.4	40	M16×2.0	22	27	28.575	64	84	8	28	22	21.6	28.5
PHS 16-M16x1.5	21	15	16	19.4	40	M16×1.5	22	27	28.575	64	84	8	28	22	21.6	28.5
PHS 18-M18x1.5	23	16.5	18	21.9	44	M18×1.5	25	31	31.75	71	93	10	32	27	26	42.5
PHS 20-M20x1.5	25	18	20	24.4	46	M20×1.5	27.5	34	34.925	77	100	10	33	30	31.5	42.5
PHS 22-M22x1.5	28	20	22	25.8	54	M22×1.5	30	38	38.10	84	111	12	37	32	38	57
PHS 25-M24x2.0	31	22	25	29.6	60	M24×2.0	33.5	42	42.86	94	124	12	42	36	47.5	68
PHS 28-M27x2.0	35	24	28	32.3	66	M27×2.0	37	46	47.63	103	136	14	48	41	58	75
PHS 30-M30x2.0	37	25	30	34.8	70	M30×2.0	40	50	50.8	110	145	15	51	41	64	88

ARK 浮动接头
Floating Joint
Series KJAT, KJAF

外形尺寸图 Dimensions (mm)

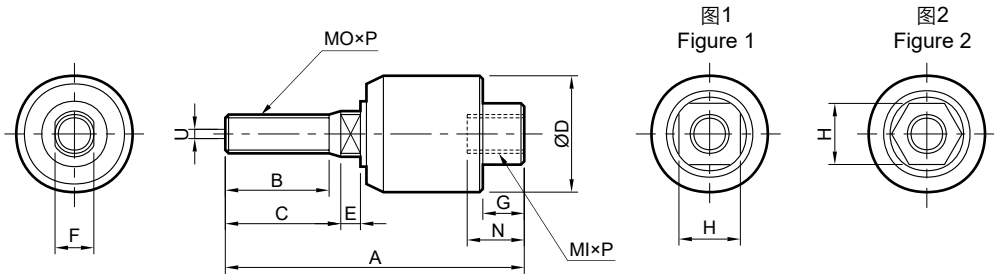

型号 Model	缸径 Bore	MI×P	MO×P	A	B	C	D	E	F	G	H	N	容许误差 Allowable tolerance U	图号 Figure No.	摇动角度 Rotation Angle
KJA-1003T	6	M3x0.5	M3x0.5	24.5	8	9	12	2	3	4	8	7	0.5	图 1 Figure 1	±5°
KJA-1004T	8	M4x0.7	M4x0.7	24.5	8	9	12	2	4	4	8	7	0.5		
KJA-1005T	10, 15	M5x0.8	M5x0.8	38	14	15	18	3	5	5	11	9	0.5		
KJA-1006T	15	M6x1.0	M6x1.0	38	14	15	18	3	6	5	11	9	0.5		
KJA-1008T	20	M8x1.25	M8x1.25	50	18	20	24	4	8	7	14	12	0.5		
KJA-1010T	25, 30	M10x1.25/1.5	M10x1.25/1.5	59	20	22	26	5	10	7	17	14	0.75		
KJA-1012T	40	M12x1.25/1.5/1.75	M12x1.25/1.5/1.75	57	20	22	28	5	12	8	19	12	0.75		
KJA-1014T	40	M14x1.5	M14x1.5	70	21	24	35	7	14	8	22	17	1		
KJA-1016T	50, 63	M16x1.5	M16x1.5	90	26	28	45	9	16	13	28	24	1.25		
KJA-1018T	50, 63	M18x1.5	M18x1.5	90	26	28	45	9	18	13	28	24	1.25		
KJA-1020T	80	M20x1.5	M20x1.5	103	30	32	55	10	20	16	32	27	2	图 2 Figure 2	
KJA-1022T	80	M22x1.5	M22x1.5	103	30	32	55	10	22	16	32	27	2		
KJA-1024T	100	M24x1.5	M24x1.5	124	35	38	61	12	24	19	41	33	2.5		
KJA-1026T	100	M26x1.5	M26x1.5	130	43	45	61	12	26	19	41	33	2.5		
KJA-1027T	125	M27x2.0	M27x2.0	153	63	65	63	20	27	19	41	33	2.5		
KJA-1030T	125, 140	M30x1.5/2.0/3.5	M30x1.5/2.0/3.5	153	57	59	63	20	30	18	41	33	3		
KJA-1036T	140, 160	M36x1.5/2.0	M36x1.5/2.0	195	80	82	75	18	36	22	50	41	4		
KJA-1040T	160	M40x2.0	M40x2.0	194	82	100	75	18	40	23	54	41	5		
KJA-1045T	160	M45x2.0	M45x2.0	205	78	95	85	14	45	33.5	64	50	5		
KJA-1050T	160	M50x2.0	M50x2.0	208	78	95	85	14	50	33.5	64	50	6		

* 容许气缸使用压力 <1MPa，容许液压缸使用压力 <7MPa。
Allowable operating pressure of air cylinder < 1 MPa, that of hydaulic cylinder < 7 MPa.

浮动接头
Floating Joint
Series KJAT, KJAF

外形尺寸图 Dimensions (mm)

图3
Figure 3

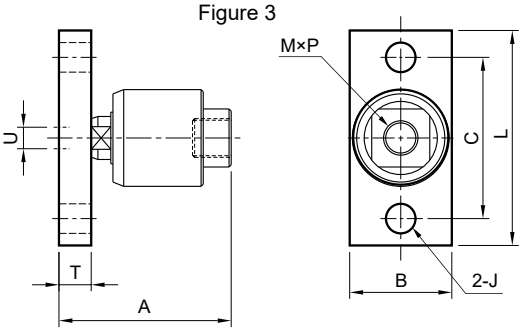

图4
Figure 4

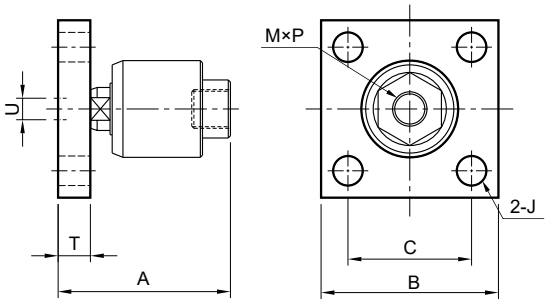

型号 Model	缸径 Bore	MI×P	A	B	C	J	L	T	容许误差 Allowable tolerance U	图号 Figure No.	摇动角度 Rotation Angle
KJA-1008F	20	M8x1.25	38	25	40	7	52	6	0.5	图 3 Figure 3	±5°
KJA-1010F	25, 30	M10x1.25	46	32	44	7	56	9	0.75		
KJA-1012F	40	M12x1.25	46	32	44	7	56	9	0.75		
KJA-1014F	40	M14x1.5	61	38	60	11	80	12	1		
KJA-1016F	50, 63	M16x1.5	80	74	45	11	-	15	1.25	图 4 Figure 4	
KJA-1018F	50, 63	M18x1.5	80	74	45	11	-	15	1.25		
KJA-1020F	80	M20x1.5	91	100	62	14	-	18	1.25		
KJA-1022F	80	M22x1.5	91	100	62	14	-	18	1.25		
KJA-1024F	100	M24x1.5	108	100	70	14	-	21	2.5		
KJA-1026F	100	M26x1.5	108	100	70	14	-	21	2.5		
KJA-1027F	125	M27x2.0	111	100	70	14	-	21	2.5		
KJA-1030F	125, 140	M30x1.5	117	100	70	14	-	21	3		
KJA-1036F	140, 160	M36x1.5	140	130	95	16	-	25	4		

* 容许气缸使用压力 <1MPa，容许液压缸使用压力 <7MPa。
Allowable operating pressure of air cylinder < 1 MPa, hydaulic cylinder < 7 MPa.

ARK 磁性开关
Auto Switch
Series D-A73K

规格 Specifications

型号 Model	D-A73K	D-A73KD	D-A73KP	D-A73KN
应用气缸系列 Applied cylinder series	KCQ2 (Ø125)			
接线 Wiring	两线 2-wire		三线 3-wire	
开关逻辑 Switching logic	SPST 常开型 SPST normally open	电子式常开型 Solid state, normally open		
感应型式 Sensor type	有接点磁簧管 Reed switch	无接点 None	PNP	NPN
电压范围 Operating voltage	5~240V DC/AC	10~28V DC	5~30V DC	
开关电流 Switching current	100 mA Max.	50 mA Max.	200 mA Max.	
接点容量 Contact rating	10 W Max.	1.4 W Max.	6 W Max.	
电流消耗 Currrent consumption	无 None	40 μA @ 24V Max.	22 mA @ 24V Max.	
残留压降 Residual voltage	3.5V Max.	2.65V @ 50 mA Max.	0.5V @ 50 mA Max.	
电流泄漏 Current leakage	无 None	90 μA @ 28V Max.	0.01 mA Max.	
指示灯 Indicator light	LED 红色 red	LED 红色 red	LED 绿色 green	LED 红色 red
电缆线 Cable	Ø3.3, 2C, PVC		Ø3.3, 3C, PVC	
*1) 感应灵敏度 Inducing sensitivity	60 高斯 Gauss	20~750 高斯 Gauss	40 高斯 Gauss	
工作频率 Operating frequency	200 HZ	1000 HZ		
环境温度 Ambient temperature	-10~70℃			
*2) 耐冲击 Shock resistance	30 G	50 G		
*3) 耐震动 Vibration resistance	9 G			
防护等级 Enclosure	IEC 60529 IP67			
保护回路 Protection circuit	无 None	突波吸收 surge absorption	输出短路保护，电源逆接保护，突波吸收 Short circuit protection, reverse polarity protection of power source, surge absorption	
电路图 Circuit diagram	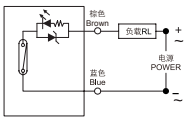	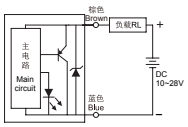	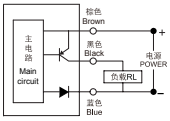	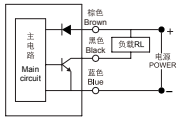

*1) 测量使用标准磁石 : Ø15.5xØ8x5t（异方性橡胶磁石)。Standard measuring magnet: Ø15.5xØ8x5t (anisotropic rubber magnet).
2) 正弦波 /X, Y, Z 3 轴向 / 每方向 3 回 / 每一回 11ms。Sin wave/ X, Y, Z 3 directions/ 3 times each direction/ 11 ms each time.
3) 复振幅 1.5mm/10Hz~55Hz~10Hz 往复 1 分钟 /X, Y, Z 3 轴向 / 每一回 1 小时。
Complex amplitude 1.5 mm/ 10Hz~55Hz~10Hz sweep 1 min/ X, Y, Z 3 directions/ 1 hour each time.

3

外形尺寸图 Dimensions (mm)

D-A73K, D-A73KD

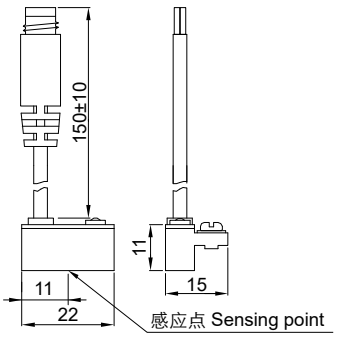

D-A73KP, D-A73KN

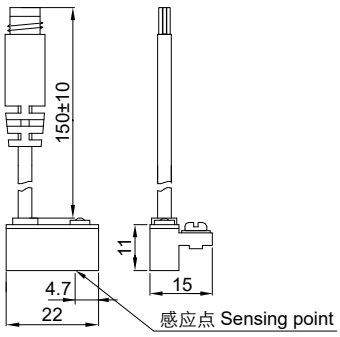

适用气缸沟槽 Applicable cylinder groove

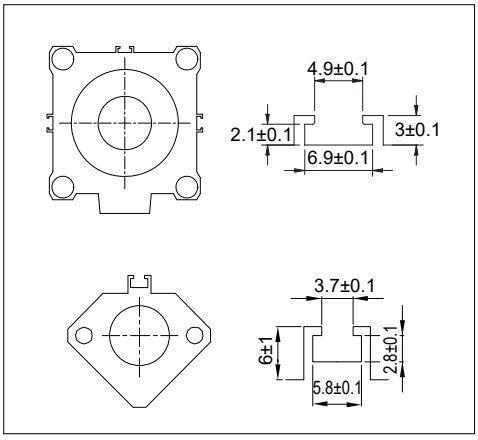

ARK 磁性开关
Auto Switch
Series D-Z80VK

规格 Specifications

型号 Model	D-Z80VK	D-Z80VKD	D-Z80VKP	D-Z80VKN
应用气缸系列 Applied cylinder series	KMUB (ST ≤ 10 mm), KCRB2			
接线 Wiring	两线 2-wire		三线 3-wire	
开关逻辑 Switching logic	SPST 常开型 SPST normally open	电子式常开型 Solid state, normally open		
感应型式 Sensor type	有接点磁簧管 Reed switch	无接点 None	PNP	NPN
电压范围 Operating voltage	5~120V DC/AC	10~28V DC	5~30V DC	
开关电流 Switching current	100 mA Max.	50 mA Max.	200 mA Max.	
接点容量 Contact rating	3.5 W Max.	1.4 W Max.	6 W Max.	
电流消耗 Currrent consumption	无 None	40 μA @ 24V Max.	7.5 mA @ 24V Max.	
残留压降 Residual voltage	2.5V @ 100 mA DC Max.	2.65V @50 mA Max.	0.5V @ 200 mA Max.	
电流泄漏 Current leakage	无 None	90 μA @ 28V Max.	0.01 mA Max.	
指示灯 Indicator light	LED 红色 red	LED 红色 red	LED 绿色 green	LED 红色 red
电缆线 Cable	Ø2.9, 2C, PVC	Ø2.9, 2C, PVC	Ø2.9, 3C, PVC	
*1) 感应灵敏度 Inducing sensitivity	40~50 高斯 Gauss	40~750 高斯 Gauss		
工作频率 Operating frequency	1000 HZ		5000 HZ	
环境温度 Ambient temperature	-10~70℃			
*2) 耐冲击 Shock resistance	30 G	50 G		
*3) 耐震动 Vibration resistance	9 G			
防护等级 Enclosure	IEC 60529 IP67			
保护回路 Protection circuit	无 None	突波吸收 surge absorption	输出短路保护，电源逆接保护，突波吸收 Short circuit protection, reverse polarity protection of power source, surge absorption	
电路图 Circuit diagram	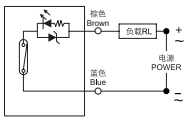	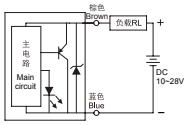	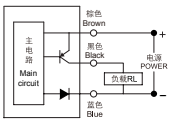	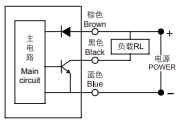

*1) 测量使用标准磁石 : Ø15.5xØ8x5t（异方性橡胶磁石)。Standard measuring magnet: Ø15.5xØ8x5t (anisotropic rubber magnet).
2) 正弦波 /X, Y, Z 3 轴向 / 每方向 3 回 / 每一回 11ms。Sin wave/ X, Y, Z 3 directions/ 3 times each direction/ 11 ms each time.
3) 复振幅 1.5mm/10Hz~55Hz~10Hz 往复 1 分钟 /X, Y, Z 3 轴向 / 每一回 1 小时。
Complex amplitude 1.5 mm/ 10Hz~55Hz~10Hz sweep 1 min/ X, Y, Z 3 directions/ 1 hour each time.

3

外形尺寸图 Dimensions (mm)

D-Z80VK

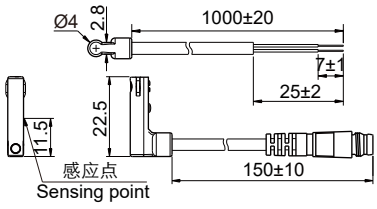

D-Z80VKD, D-Z80VKP, D-Z80VKN

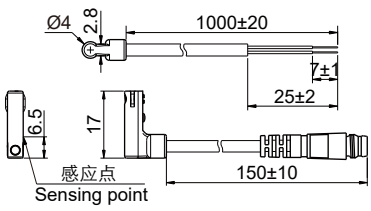

适用气缸沟槽Applicable cylinder groove

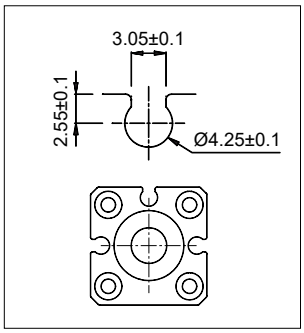

ARK 磁性开关
Auto Switch
Series KT-11

规格 Specifications

型号 Model	KT-11R	KT-11D	KT-11P	KT-11N
应用气缸系列 Applied cylinder series	SDA, TN			
接线 Wiring	两线 2-wire		三线 3-wire	
开关逻辑 Switching logic	SPST 常开型 SPST normally open	电子式常开型 Solid state, normally open		
感应型式 Sensor type	有接点磁簧管 Reed switch	无接点 None	PNP	NPN
电压范围 Operating voltage	5~240V DC/AC	10~28V DC	5~30V DC	
开关电流 Switching current	100 mA Max.	4~40 mA Max.	200 mA Max.	
接点容量 Contact rating	10 W Max.	1.1 W Max.	6 W Max.	
电流消耗 Currrent consumption	无 None		20 mA @ 24V Max.	22 mA @ 24V Max.
残留压降 Residual voltage	3.5V Max.		0.5V Max.	
电流泄漏 Current leakage	无 None	1 mA Max.	0.01 mA Max.	
指示灯 Indicator light	LED 红色 red	LED 绿色 green	LED 红色 red	LED 绿色 green
电缆线 Cable	Ø3.3, 2C, PVC		Ø3.3, 3C, PVC	
*1) 感应灵敏度 Inducing sensitivity	70 高斯 Gauss	60 高斯 Gauss		
工作频率 Operating frequency	200 HZ	1000 HZ		
环境温度 Ambient temperature	-10~70℃			
*2) 耐冲击 Shock resistance	30 G	50 G		
*3) 耐震动 Vibration resistance	9 G			
防护等级 Enclosure	IEC 60529 IP67			
保护回路 Protection circuit	无 None	突波吸收 surge absorption	电源逆接保护，突波吸收 Reverse polarity protection of power source, surge absorption	
电路图 Circuit diagram	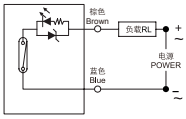	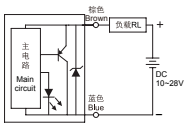	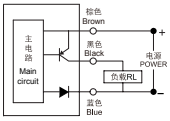	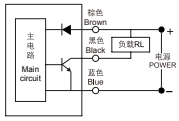

*1) 测量使用标准磁石 : Ø15.5xØ8x5t（异方性橡胶磁石)。Standard measuring magnet: Ø15.5xØ8x5t (anisotropic rubber magnet).
2) 正弦波 /X, Y, Z 3 轴向 / 每方向 3 回 / 每一回 11ms。Sin wave/ X, Y, Z 3 directions/ 3 times each direction/ 11 ms each time.
3) 复振幅 1.5mm/10Hz~55Hz~10Hz 往复 1 分钟 /X, Y, Z 3 轴向 / 每一回 1 小时。
Complex amplitude 1.5 mm/ 10Hz~55Hz~10Hz sweep 1 min/ X, Y, Z 3 directions/ 1 hour each time.

3

外形尺寸图 Dimensions (mm)

KT-11R　　KT-11D　　KT-11P/KT-11N

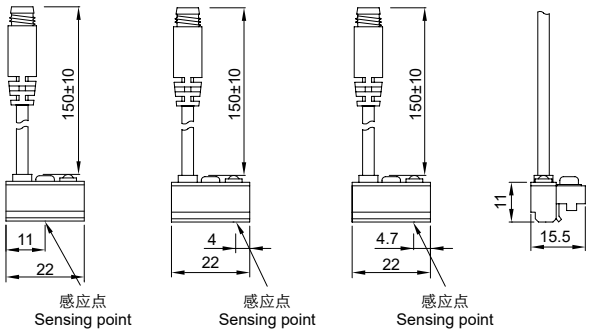

适用气缸沟槽
Applicable cylinder groove

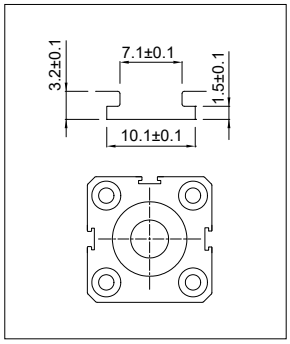

ARK 磁性开关
Auto Switch
Series KT-39

规格 Specifications

型号 Model	KT-39D	KT-39P	KT-39N
应用气缸系列 Applied cylinder series	KMGJ, KCUJ		
接线 Wiring	两线 2-wire	三线 3-wire	
开关逻辑 Switching logic	电子式常开型 Solid state, normally open		
感应型式 Sensor type	无接点 None	PNP	NPN
电压范围 Operating voltage	10~28V DC	5~28V DC	
开关电流 Switching current	4~20 mA Max.	50 mA Max.	
接点容量 Contact rating	0.6 W Max.	1.5 W Max.	
电流消耗 Currrent consumption	无 None	10 mA @ 24V DC Max.	
残留压降 Residual voltage	3.5V Max.	0.5V @ 50 mA Max.	
电流泄漏 Current leakage	0.8 mA Max.	0.01 mA Max.	
指示灯 Indicator light	LED 红色 red		
电缆线 Cable	Ø2.6, 2C, PU	Ø2.6, 3C, PU	
*1) 感应灵敏度 Inducing sensitivity	40 高斯 Gauss		
工作频率 Operating frequency	1000 HZ		
环境温度 Ambient temperature	-10~70℃		
*2) 耐冲击 Shock resistance	50 G		
*3) 耐震动 Vibration resistance	9 G		
防护等级 Enclosure	IEC 60529 IP67		
保护回路 Protection circuit	突波吸收 surge absorption	电源逆接保护，突波吸收 Reverse polarity protection of power source, surge absorption	
电路图 Circuit diagram	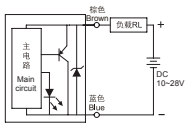	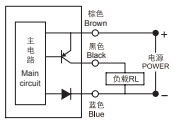	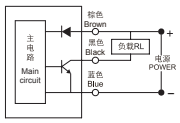

*1) 测量使用标准磁石 : Ø15.5xØ8x5t（异方性橡胶磁石)。Standard measuring magnet: Ø15.5xØ8x5t (anisotropic rubber magnet).
2) 正弦波 /X, Y, Z 3 轴向 / 每方向 3 回 / 每一回 11ms。Sin wave/ X, Y, Z 3 directions/ 3 times each direction/ 11 ms each time.
3) 复振幅 1.5mm/10Hz~55Hz~10Hz 往复 1 分钟 /X, Y, Z 3 轴向 / 每一回 1 小时。
Complex amplitude 1.5 mm/ 10Hz~55Hz~10Hz sweep 1 min/ X, Y, Z 3 directions/ 1 hour each time.

3

外形尺寸图 Dimensions (mm)

KT-39D/ KT-39P/ KT-39N

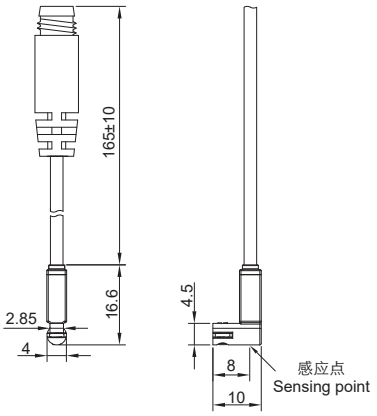

适用气缸沟槽
Applicable cylinder groove

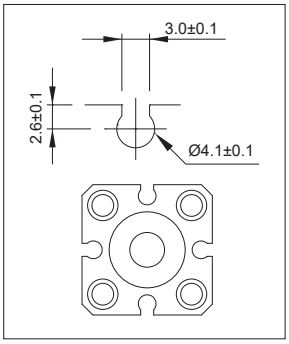

ARK 磁性开关
Auto Switch
Series D-M9BK

规格 Specifications

型号 Model	D-M9BK
应用气缸系列 Applied cylinder series	KCJP2, KCJ2, KCM2, KCM2R, KC85, MA, MAL, KCG1, KMB, KCA1, KCS1, SC, SU, KCP95, KC95, SI, SIL, KCQ2 (Ø12~Ø100), KCQ2 (Ø140~Ø200), ADN/AEN, KCQM, KMGPM/L, KMGGM/L, KCXSJM/L, KCXSM/L, KCXSW, KCU, KMUB (ST>10 mm), KCY3R, KCY1S, KMXS, KMXQ, KMXH, KMSQB, KCRB2, KMK, KMHC2, KMHC2M, KMHY2, KMHZ2, KMHS3, KMHL2, KMHF2
接线 Wiring	两线 2-wire
开关逻辑 Switching logic	电子式常开型 Solid state, normally open
感应型式 Sensor type	无接点 None
电压范围 Operating voltage	10~30V DC
开关电流 Switching current	100 mA Max.
接点容量 Contact rating	3 W Max.
电流消耗 Currrent consumption	50 μA @ 24V Max.
残留压降 Residual voltage	2.65V @ 100 mA Max.
电流泄漏 Current leakage	50 μA @ 24V Max.
指示灯 Indicator light	LED 红色 red
电缆线 Cable	Ø2.8, 2C, PVC
*1) 感应灵敏度 Inducing sensitivity	60~800 高斯 Gauss
工作频率 Operating frequency	1000 HZ
环境温度 Ambient temperature	-10~70℃
*2) 耐冲击 Shock resistance	50 G
*3) 耐震动 Vibration resistance	9 G
防护等级 Enclosure	EN 60529 IP67
保护回路 Protection circuit	电源逆接保护，突波吸收 Reverse polarity protection of power source, surge absorption
电路图 Circuit diagram	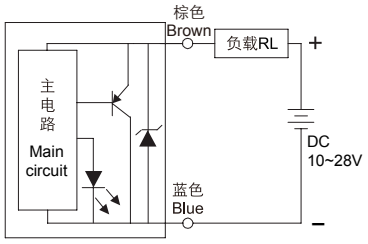
外形尺寸 Dimensions (mm)	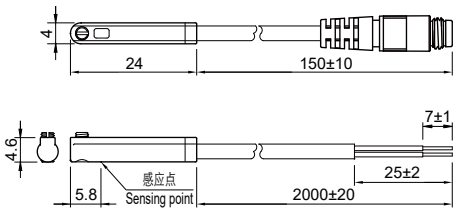

*1) 测量使用标准磁石 : Ø15.5xØ8x5t（异方性橡胶磁石)。
Standard measuring magnet: Ø15.5xØ8x5t (anisotropic rubber magnet).
2) 正弦波 /X, Y, Z 3 轴向 / 每方向 3 回 / 每一回 11ms。
Sin wave/ X, Y, Z 3 directions/ 3 times each direction/ 11 ms each time.
3) 复振幅 1.5mm/10Hz~55Hz~10Hz 往复 1 分钟 /X, Y, Z 3 轴向 / 每一回 1 小时。
Complex amplitude 1.5 mm/ 10Hz~55Hz~10Hz sweep 1 min/ X, Y, Z 3 directions/ 1 hour each time.

磁性开关与固定码的使用
Usage of Auto Switch & Clamps on Cylinders

气缸适配列表 Cylinder - Auto Switch &Clamp

系列 Series	缸径 Bore size (mm)	磁性开关 Auto switch	固定码 Clamp
KCJP2	4~16	D-M9BK	-
KCJ2	10, 16	D-M9BK	PBC-S*
KCM2	20, 25, 32, 40	D-M9BK	PBC-S*
KCM2R	20, 25, 32, 40	D-M9BK	PBC-S*
KC85	8, 10, 12, 16, 20, 25	D-M9BK	PBC-S*
MA	16, 20, 25, 32, 40, 50, 63	D-M9BK	PBC-S*
MAL	20, 25, 32, 40	D-M9BK	PBC-A*
KCG1	20, 25, 32, 40, 50, 63	D-M9BK	PBC-A*
KMB	40	D-M9BK	PC+PO-1
	50, 63		PC+PO-2
	80		PC+PO-3
	100		PC+PO-4
KCA1	40~100	D-M9BK	PC+PCD
KCS1	125~180	D-M9BK	PC+PCD
	200		PC+PBL (定制 custom-made)
SC	32~250	D-M9BK	PC+PCD
SU	32, 40, 50	D-M9BK	PC+PO-1
	63		PC+PO-2
	80		PC+PO-3
	100		PC+PO-4
KCP95	32~125	D-M9BK	PS
KC95	160, 200	D-M9BK	PC+PCD
	250, 320		PC+PCF
SI, SIL	32, 40	D-M9BK	PC+PO-1
	50, 63		PC+PO-2
	80, 100		PC+PO-3
	125		PF7-5
	160, 200		PF7-6
KCQ2	12~100	D-M9BK	-
	125	D-A73K	-
	140~200	D-M9BK	-
SDA	12~100	KT-11R	-
ADN/AEN	12~125	D-M9BK	PS
KCQM	12~100	D-M9BK	-
KMGJ	6, 10	KT-38D	-
KMGPM/L	12~63	D-M9BK	-
KMGGM/L	20, 25, 32, 40, 50, 63, 80, 100	D-M9BK	PBC-A*
KCXSJM/L	6~32	D-M9BK	-
KCXSM/L	10~32	D-M9BK	PS
KCXSW	10~32	D-M9BK	PS
TN	10~32	KT-11R	-
KCUJ	4~20	KT-38D	-
KCU	6~32	D-M9BK	-
KMUB	25~63 (ST ≤ 10 mm)	D-Z80VK	KMUZ-025
	25~63 (ST > 10 mm)	D-M9BK	
KCY3R	6~20	D-M9BK	-
	25~63	D-M9BK	PS
KCY1S	6~40	D-M9BK	KMUZ-025
KMXS	6~25	D-M9BK	-
KMXQ	6~25	D-M9BK	-
KMXH	6~20	D-M9BK	-
KMSQB	10~200	D-M9BK	-
KCRB2	10~40	D-M9BK	-
		D-Z80VK	-
KMK	12~63	D-M9BK	-
KMHC2	10~25	D-M9BK	PS
KMHC2M	12~32	D-M9BK	-
KMHY2	10~25	D-M9BK	-
KMHZ2	6~40	D-M9BK	-
KMHS3	16~25	D-M9BK	-
	32~125		PS
KMHL2	10~40	D-M9BK	PS
KMHF2	8~20	D-M9BK	-

固定示意图 Clamping instruction

PBC-S*
PBC-A*

型号表示方法 How to Order

PBC - S 06

缸筒材质
Material of barrel

S	不锈钢 Stainless steel
A	铝合金 Aluminium alloy

缸径 Bore size (mm)
06, 08, 10, 12, 16, 20,
25, 32, 40, 50, 63, 80, 100

PC

PCD

PBL

PO-*

PCF

PS

PC+PCD

PC+PO-*

PC+PBL

PF7-*

KMUZ-025

3

共通规格的定制规格
Made to Order Common Specifications

定制规格 Made to Order

记号 Symbol	规格 Specification	系列 Series
-XB6	耐热气缸 Heat resistant cylinder (150°C)	KCA1, KCS1
-XB7	耐寒气缸 Cold resistant cylinder (-30°C~60°C)	KCA1
-XB10	中间行程(使用专用缸体) Intermediate stroke (Exclusive body used)	KCQ2, KMGP
-XC4	带强力防尘 With heavy duty scraper	KCM2, KMB, KCA1, KCS1, KCQ2
-XC6	活塞杆和杆端螺母的材质为不锈钢 Piston rod and rod end nut made of stainless steel	KCM2, KMB, KCA1, KCS1, KCQ2
-XC7	拉杆, 缓冲阀, 拉杆螺母等的材质为不锈钢 Tie rod, cushion valve, tie rod nut, etc. made of stainless steel	KMB, KCA1
-XC8	可变行程气缸/伸出调整型 Adjustable stroke cylinder/ Adjustable extend stroke	KCM2, KMB, KCA1, KCS1, KCQ2, KCP95
-XC9	可变行程气缸/缩回调整型 Adjustable stroke cylinder/ Adjustable retract stroke	KCM2, KMB, KCA1, KCS1, KCQ2, KCP95
-XC10	双行程气缸/双杆型 Dual stroke cylinder/ Double rod	KCM2, KMB, KCA1, KCS1, KCQ2, KCP95
-XC11	双行程气缸/单杆型 Dual stroke cylinder/ Single rod	KCM2, KMB, KCA1, KCS1, KCQ2, KCP95
-XC12	串联气缸 Tandem cylinder	KMB, KCA1, KCS1, KCQ2

型号表示方法 How to Order

1. 标准型号 Standard model no. - XB6

规格 Specification

-XB6
-XB7
-XB10
-XC4
-XC6
-XC7
-XC12

2. 可变行程气缸 / 伸出可调 Adjustable Stroke Cylinder/ Adjustable Extend Stroke

KCM2 [安装形式 Mounting] [缸径 Bore size] - [行程 Stroke] [缓冲 Cushion] [*行程调节范围 Adjustable stroke range] - XC8

KMB [安装形式 Mounting] [缸径 Bore size] - [行程 Stroke] [*行程调节范围 Adjustable stroke range] – XC8

KCA1 [安装形式 Mounting] [缸径 Bore size] - [行程 Stroke] [*行程调节范围 Adjustable stroke range] – XC8

KCS1 [安装形式 Mounting] [缸径 Bore size] - [行程 Stroke] [*行程调节范围 Adjustable stroke range] – XC8

KCP95S [安装形式 Mounting] [缸径 Bore size] - [行程 Stroke] [*行程调节范围 Adjustable stroke range] – XC8

KCQ2 [缸径 Bore size] - [行程 Stroke] D(M) [*行程调节范围 Adjustable stroke range] – XC8

* 行程调整范围
Adjustable stroke range

A	0~25 mm
B	0~50 mm
20	0~20 mm
40	0~40 mm
...	...

共通规格的定制规格
Made to Order Common Specifications

3. 可变行程气缸 / 缩回可调 Adjustable Stroke Cylinder/ Adjustable Retract Stroke

KCM2 [安装形式 Mounting] [缸径 Bore size] - [行程 Stroke] [缓冲 Cushion] [*行程调节范围 Adjustable stroke range] - XC9

KMB [安装形式 Mounting] [缸径 Bore size] - [行程 Stroke] [*行程调节范围 Adjustable stroke range] – XC9

KCA1 [安装形式 Mounting] [缸径 Bore size] - [行程 Stroke] [*行程调节范围 Adjustable stroke range] – XC9

KCS1 [安装形式 Mounting] [缸径 Bore size] - [行程 Stroke] [*行程调节范围 Adjustable stroke range] – XC9

KCP95S [安装形式 Mounting] [缸径 Bore size] - [行程 Stroke] [*行程调节范围 Adjustable stroke range] – XC9

KCQ2 [缸径 Bore size] - [行程 Stroke] D(M) [*行程调节范围 Adjustable stroke range] – XC9

* 行程调整范围
Adjustable stroke range

A	0~25 mm
B	0~50 mm
20	0~20 mm
40	0~40 mm
...	...

4. 双行程气缸 / 双杆型 Dual stroke cylinder/ Double rod

KCM2 [安装形式 Mounting] [缸径 Bore size] - [行程 A Stroke A] + [行程 B Stroke B] – XC10

KMB [安装形式 Mounting] [缸径 Bore size] - [行程 A Stroke A] + [行程 B Stroke B] – XC10

KCA1 [安装形式 Mounting] [缸径 Bore size] - [行程 A Stroke A] + [行程 B Stroke B] – XC10

KCS1 [安装形式 Mounting] [缸径 Bore size] - [行程 A Stroke A] + [行程 B Stroke B] – XC10

KCP95S [安装形式 Mounting] [缸径 Bore size] - [行程 A Stroke A] + [行程 B Stroke B] – XC10

KCQ2 [缸径 Bore size] - [行程 A Stroke A] + [行程 B Stroke B] D(M) – XC10

3

5. 双行程气缸 / 单杆型 Dual stroke cylinder/ Single rod

KCM2 [安装形式 Mounting] [缸径 Bore size] - [行程 A Stroke A] + [行程 (B-A) Stroke (B-A)] – XC11

KMB [安装形式 Mounting] [缸径 Bore size] - [行程 A Stroke A] + [行程 (B-A) Stroke (B-A] – XC11

KCA1 [安装形式 Mounting] [缸径 Bore size] - [行程 A Stroke A] + [行程 (B-A) Stroke (B-A] – XC11

KCS1 [安装形式 Mounting] [缸径 Bore size] - [行程 A Stroke A] + [行程 (B-A) Stroke (B-A] – XC11

KCP95S [安装形式 Mounting] [缸径 Bore size] - [行程 A Stroke A] + [行程 (B-A) Stroke (B-A] – XC11

KCQ2 [缸径 Bore size] - [行程 A Stroke A] + [行程 (B-A) Stroke (B-A] D(M) – XC11

共通规格的定制规格
Made to Order Common Specifications

-XC8

可变行程气缸 / 伸出调整型 Adjustable Stroke Cylinder/ Adjustable Extend Stroke

外形尺寸图 Dimensions (mm)

KCM2

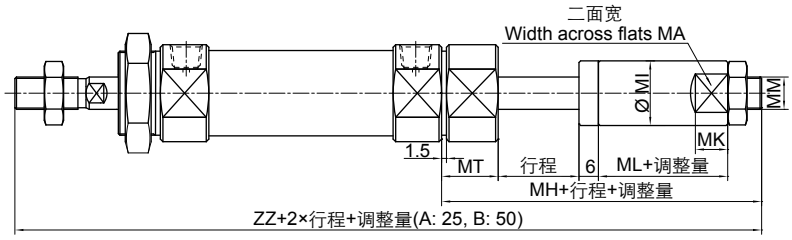

缸径 Bore size	MA	MH	MI	MK	ML	MM	MT	ZZ
20	12	47	15	8	15	M8x1.25	16.5	150
25	17	49	20	10	15	M10x1.25	17.5	156
32	17	49	20	10	15	M10x1.25	17.5	158
40	22	60	25	12	19	M14x1.5	21.5	198

KMB

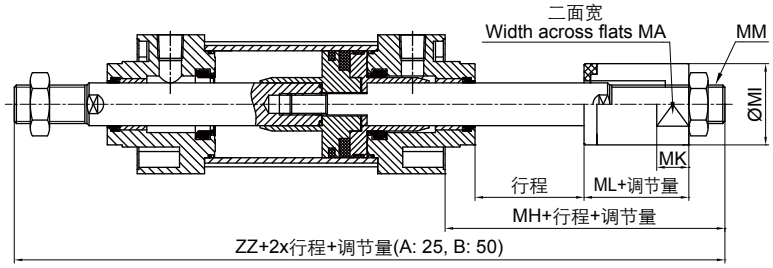

缸径 Bore size	MA	MH	MI	MK	ML	MM	ZZ
40	27	48	32	12	20	M14x1.5	183
50	32	53	38	15	21	M18x1.5	205
63	32	53	38	15	21	M18x1.5	205
80	36	72	45	20	32	M22x1.5	258
100	46	75	55	20	32	M26x1.5	261

KCA1

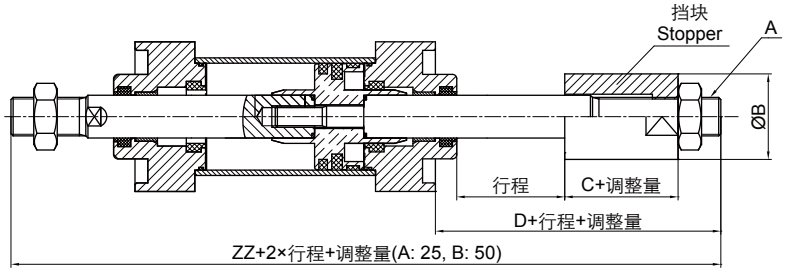

缸径 Bore size	A	B	C	D	ZZ
40	M14x1.5	32	22	46	181
50	M18x1.5	42	28	58.5	206.5
63	M18x1.5	42	28	54	210
80	M22x1.5	55	35	70	257
100	M22x1.5	55	35	70	268

KCS1

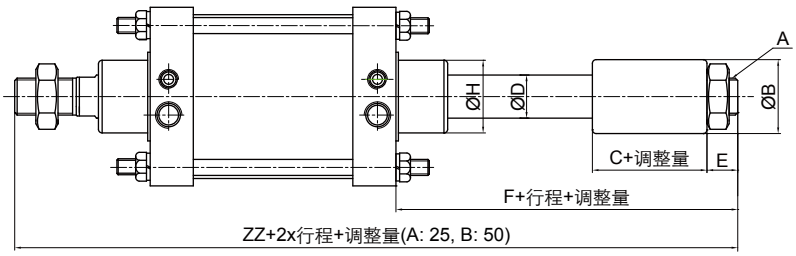

缸径 Bore size	A	B	C	D	E	F	H	ZZ
125	M30X1.5	60	37	35	30	109	59	317
140	M30X1.5	60	37	35	30	109	59	317
160	M36X1.5	60	37	40	30	109	59	335
180	M42X1.5	65	50	45	35	132	70	378
200	M42X1.5	80	50	50	35	132	75	378
250	M56X2	110	70	60	45	175	96	476
300	M56X2	110	70	60	45	181	88	534

* Ø180~Ø300(碳钢缸筒) 不适用磁性开关。
Ø180~Ø300 (carbon steel barrel) are not applicable to auto switch.

-XC8

可变行程气缸 / 伸出调整型 Adjustable Stroke Cylinder/ Adjustable Extend Stroke

外形尺寸图 Dimensions (mm)

KCP95

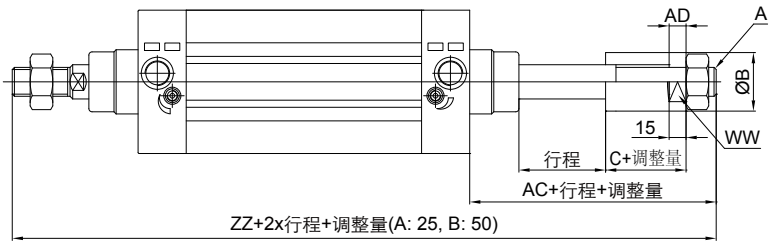

缸径 Bore size	A	AC	AD	B	C	WW	ZZ
32	M10X1.25	45	8	30	21	25	187
40	M12X1.25	49.5	8	32	21	27	208.5
50	M16X1.5	59	9	40	23	36	235
63	M16X1.5	59.5	9	40	23	36	249.5
80	M20X1.5	74	15	45	29	40	288
100	M20X1.5	77.5	15	45	29	40	306.5

KCQ2

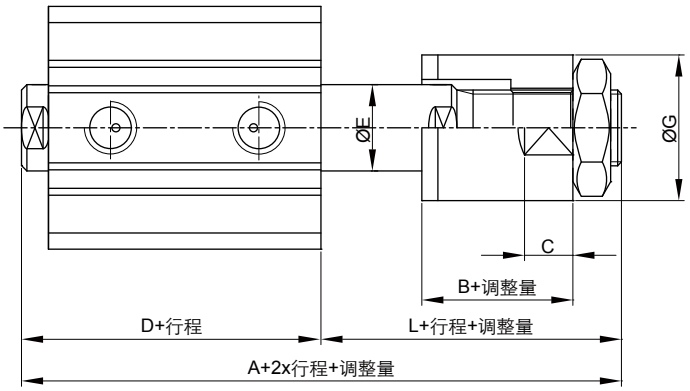

缸径 Bore size	A	B	C	D	E	G	L	适用行程 Applicable stroke
12	49.2(56.4)	16	6	25.2(32.4)	6	14	20.5	5~30
16	50(60)	16	6	26(36)	8	14	20.5	
20	51(63)	16	10	26(38)	10	18	20.5	5~50
25	62.7(72.7)	16	10	29(39)	12	18	28.7	
32	61.2(71.2)	18	15	30.5(40.5)	16	25	24	
40	71(81)	18	15	40(50)	16	25	24	
50	82(92)	28	15	40.5(50.5)	20	35	33.5	10~50
63	82.5(92.5)	28	15	42(52)	20	35	32.5	
80	126.2(136.2)	50	20	51(61)	25	48	65.2	
100	140.8(150.8)	52	20	60.5(70.5)	30	48	68.3	

* ( ) 内为带磁环型号尺寸。( ) shows dimensions with auto switch.

-XC10

双行程气缸 / 双杆型 Dual Stroke Cylinder/ Double Rod

外形尺寸图 Dimensions (mm)

KCM2

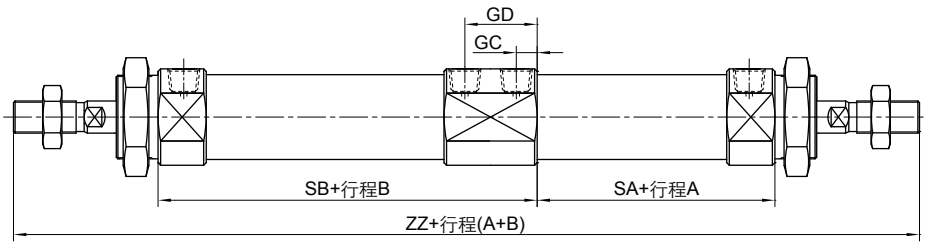

缸径 Bore size	GC	GD	SA	SB	ZZ
20	7	24	47	78	207
25	7	24	47	78	215
32	7	24	49	80	219
40	10.5	33.5	66.5	110.5	277

KMB

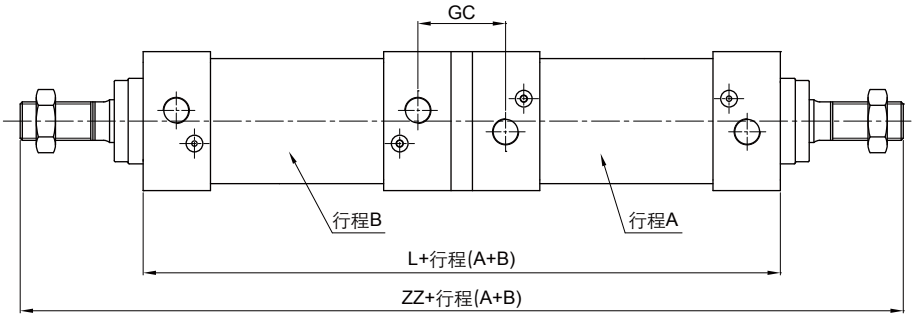

缸径 Bore size	GC	L	ZZ
40	38	178	280
50	41	198	314
63	43	198	314
80	52	242	386
100	52	242	386

KCA1

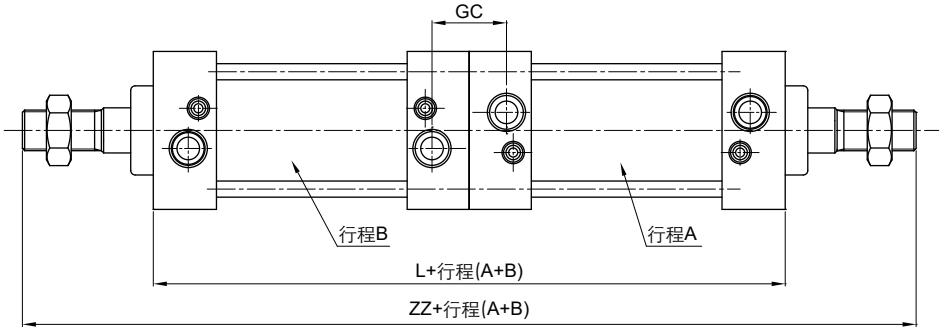

缸径 Bore size	GC	L	ZZ
40	30	167	269
50	37	179	295
63	33	195	311
80	42	231	373
100	42	251	395

-XC10

双行程气缸 / 双杆型 Dual Stroke Cylinder/ Double Rod

外形尺寸图 Dimensions (mm)

KCS1

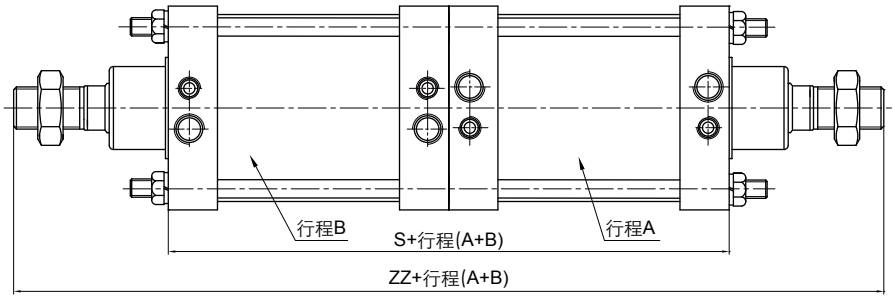

缸径 Bore size	S	ZZ
125	196	416
140	196	416
160	212	452
180	222	492
200	222	492
250	282	602
300	340	706

* Ø180~Ø300(碳钢缸筒) 不适用磁性开关。
Ø180~Ø300 (carbon steel barrel) are not applicable to auto switch.

KCP95

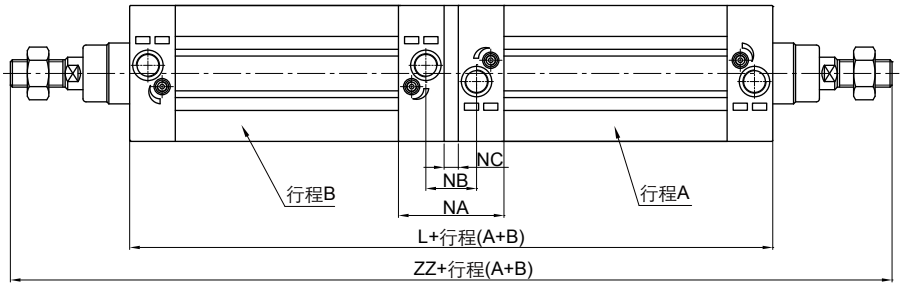

缸径 Bore size	NA	NB	NC	L	ZZ
32	67.8	35.2	10	198	294
40	69.2	39.2	10	220	328
50	69.2	39.2	10	222	360
63	81.2	46.2	10	252	390
80	85.8	49.8	14	270	442
100	91.6	53.6	14	290	472

KCQ2

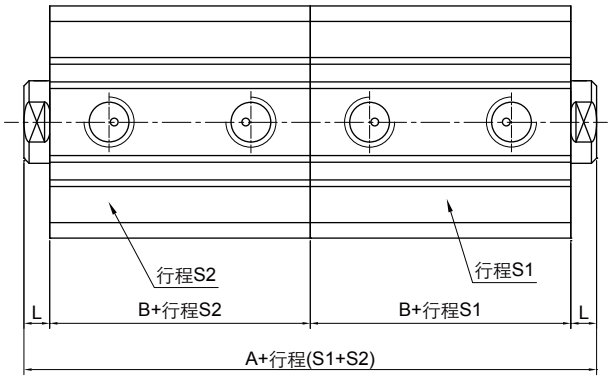

缸径 Bore size	A		B		L	适用行程 S1, S2 Applicable stroke S1, S2
	≤ 50ST	75, 100ST	≤ 50ST	75, 100ST		
12	41(63)	-	17(28)	-	3.5	5~30
16	44(68)	-	18.5(30.5)	-	3.5	
20	48(72)	-	19.5(31.5)	-	4.5	5~50
25	55(75)	-	22.5(32.5)	-	5	
32	60(80)	80(80)	23(33)	33(33)	7	5~100
40	73(93)	93(93)	29.5(39.5)	39.5(39.5)	7	
50	77(97)	97(97)	30.5(40.5)	40.5(40.5)	8	10~100
63	88(108)	108(108)	36(46)	46(46)	8	
80	107(27)	127(127)	43.5(53.5)	53.5(53.5)	10	
100	130(150)	150(150)	53(63)	63(63)	12	

* ( ) 内为带磁环型号尺寸。( ) shows dimensions with auto switch.

-XC11

双行程气缸 / 单杆型 Dual Stroke Cylinder/ Single Rod

外形尺寸图 Dimensions (mm)

KCM2

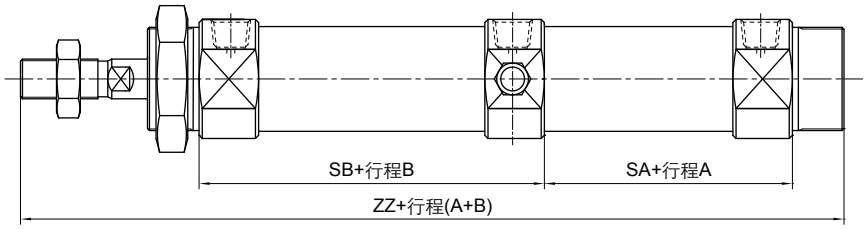

缸径 Bore size	SA	SB	ZZ
20	48	62	164
25	48	62	168
32	50	64	172
40	67.5	88.5	222

KMB

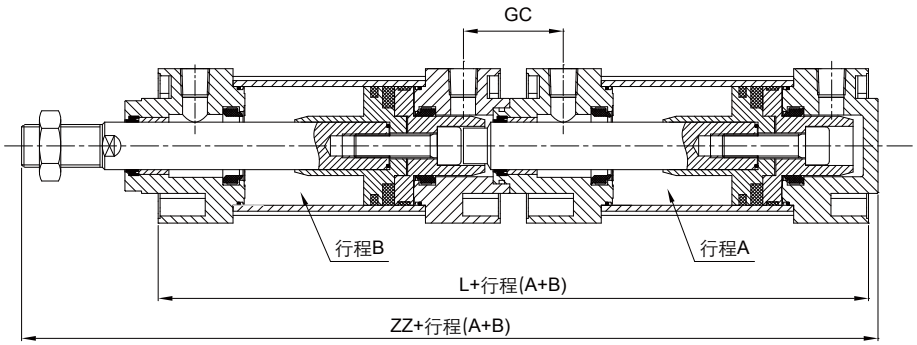

缸径 Bore size	GC	L	ZZ
40	40	179	234
50	42	199	261
63	42.5	199	261
80	55	243	319
100	55	243	319

KCA1

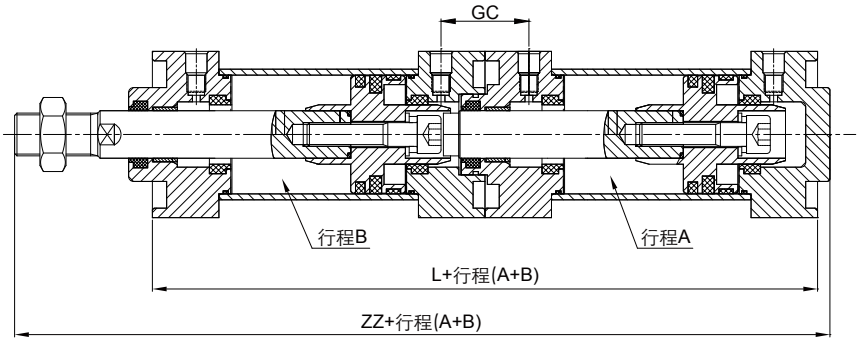

缸径 Bore size	GC	L	ZZ
40	43	168	230
50	37	180	249
63	33	196	268
80	43	232	320
100	48	252	341

-XC11

双行程气缸 / 单杆型 Dual Stroke Cylinder/ Single Rod

外形尺寸图 Dimensions (mm)

KCS1

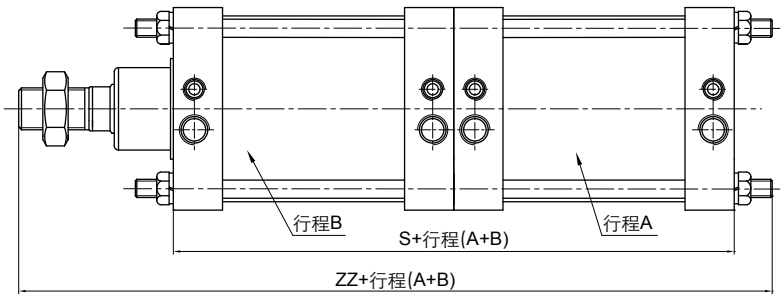

缸径 Bore size	S	ZZ
125	197	334
140	197	334
160	213	363.5
180	223	393
200	223	393
250	283	484.5
300	340	563

* Ø180~Ø300(碳钢缸筒) 不适用磁性开关。
Ø180~Ø300 (carbon steel barrel) are not applicable to auto switch.

KCP95

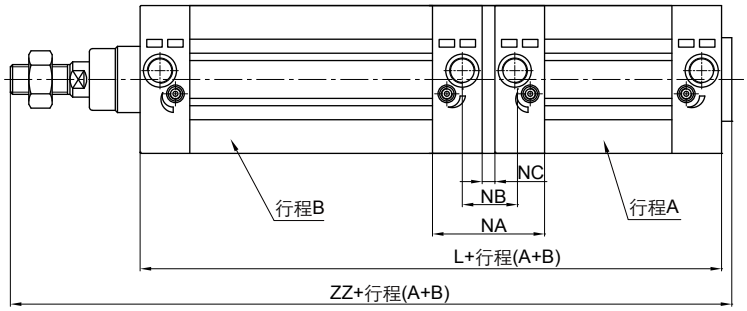

缸径 Bore size	NA	NB	NC	L	ZZ
32	61.2	36.2	11	199	251
40	70.2	40.2	11	221	279
50	70.2	40.2	11	223	296
63	82.2	47.2	11	253	326
80	86.8	50.8	15	271	361
100	92.6	54.6	15	291	386

KCQ2

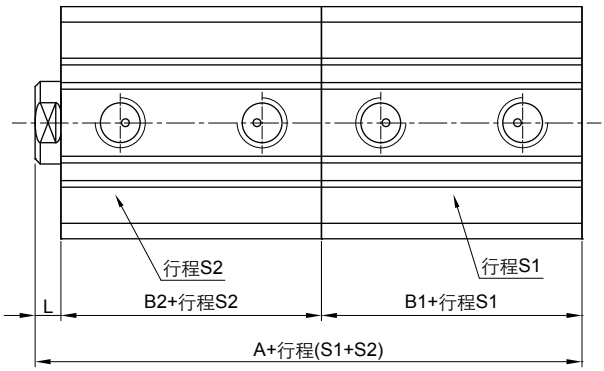

缸径 Bore size	A	B1	B2	L	适用行程 S2 Applicable stroke S2
12	45.7(63.9)	17(28)	25.2(32.4)	3.5	5~30
16	48(70)	18.5(30.5)	26(36)	3.5	
20	50(74)	19.5(31.5)	26(38)	4.5	5~50
25	56.5(76.5)	22.5(32.5)	29(39)	5	
32	60.5(80.5)	23(33)	30.5(40.5)	7	
40	76.5(96.5)	29.5(39.5)	40(50)	7	
50	79(99)	30.5(40.5)	40.5(50.5)	8	10~50
63	86(106)	36(46)	42(52)	8	
80	104.5(124.5)	43.5(53.5)	51(61)	10	
100	125.5(145.5)	53(63)	60.5(70.5)	12	

* ( ) 内为带磁环型号尺寸。( ) shows dimensions with auto switch.